DETROIT DIESEL

Document/Go to Page

Series 40

1-40-01 Updated insprection requirements for water pump replacement Construction&Industrial Applications 2
1-40-98 Improved main bearing bolt torque 4
1-40-99 Improved two-piece piston assembly 5
1-40E-00 Intake valve stem chrome plated 7
1-40E-01 Updated insprection requirements for water pump replacement 8
2-40E-00 Improved air intake manifold below 10
3-40E-00 Apply dieelectric grease oecm connectors before installing 14
4-40E-00 Cooling system surface oxidation 16

Series 53

1-53-99 Fuel injector testing 17

Series 60

13-60-98 Service Manual Page Revision 18
12-60-99 Electronic Fuel Injector Testing 19
6-60-00 Valve Stem-to-Valve guide clearance 20
3-60-01 Release of new garrett GTA40 and GTA42 turbochargers to series 60 engines 21
17-60-01 Improved identification of intake and exhaust valves 22

Series 71

3-71-99 Mechanical and Electronic fuel injector testing 25
4-V71-99 Mechanical and Electronic fuel injector testing 26

Series 92

1-92-0 Mechanical and electronic fuel injector testing 27

Series 149

5-149-99 Injector timing update for DDEC engines 28
8-149-99 Mechanical fuel injector testing 29
9-149-99 Electronic fuel injector testing 30
10-149-99 Mechanical and electronic fuel injector testing 31

MTU/DDC 2000

Service Bulletin Release 32
1-MTU-00 Fluids and lubliacants specifications for MTU-manufactured diesel engines 42
4-2000-99 Revision bar indicates change 43
4-2000-99 Cylinder head mounting bolt torque sequence 47
Application and Installation DDC/MTU Series 2000 51

DETROIT DIESEL

SERIES 40™ Service Information

NUMBER: 1–**40**–01 **S.M. REF.:** 13.3.2 **ENGINE:** 40 **DATE:** July 2001

SUBJECT: UPDATED INSPECTION REQUIREMENTS FOR WATER PUMP REPLACEMENT

INTRODUCTION

Detroit Diesel now also recommends checking the rear half of the front cover when replacing the water pump.

NOTE:
When a water pump bearing failure occurs, the rear half of the front cover may sustain damage in the area behind the water pump impeller.

DETAILS AND REASON

To determine if the rear half of the front cover is still meets rebuild requirements, use the following procedure.

1. Measure the deepest groove in the damaged area with a caliper. See Figure 1. Maximum allowable depth is 3.05 mm (0.120 in.).

NOTE:
Typically, the outer region of the grooved damaged area has the deepest gouging.

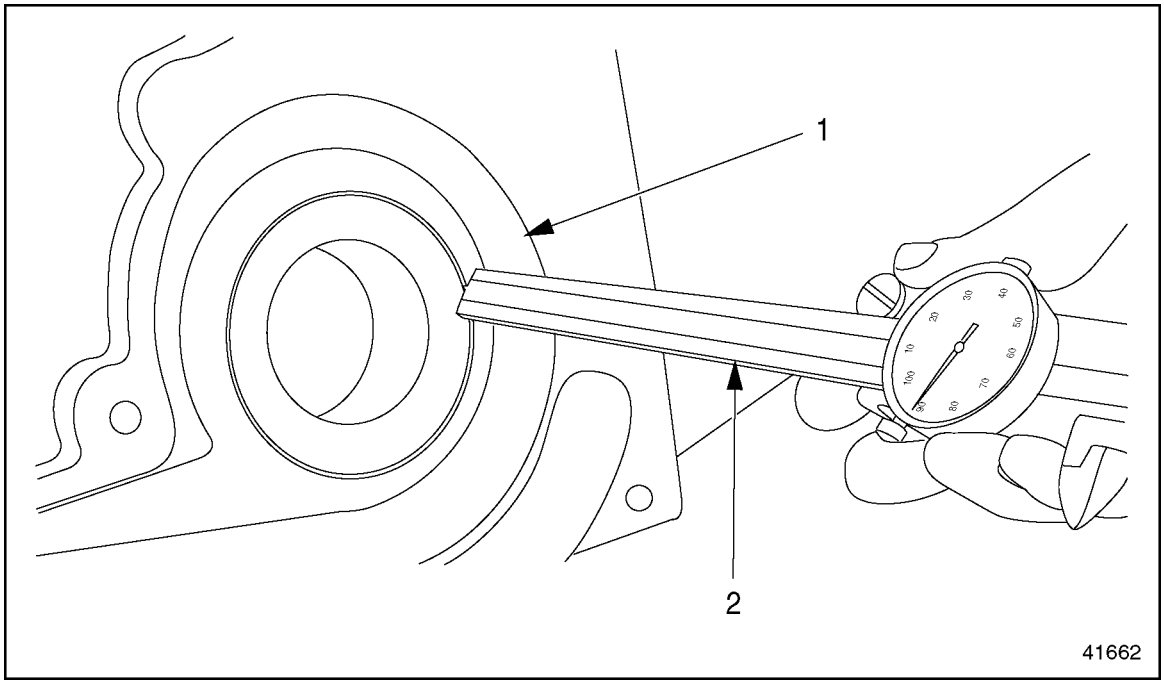

1. Front Cover
2. Caliper

Figure 1 Measurement of Deepest Front Cover Groove

2. If groove depth exceeds 3.05 mm (0.120 in.), replace the front cover. Refer to section 11.

ADDITIONAL SERVICE INFORMATION

Additional service information is available in the Detroit Diesel *Series 40 Service Manual*. The next revision to this manual will include the revised information. As a convenience to holders of the *Series 40 Service Manual*, information in service manual format is attached. The page(s) may be inserted into the manual.

DETROIT DIESEL

SERIES 40™ Service Information

NUMBER: 1-**40**-98 **S.M. REF.:** 10 **ENGINE:** 40,40E **DATE:** June 1998

SUBJECT: IMPROVED MAIN BEARING CAP BOLT TORQUE

INTRODUCTION

Detroit Diesel has improved the bolt torquing of the main bearing cap on Series 40™ engines with mechanical and electronic injectors. This improvement went into effect in May 1997. Service manual sections 10.2.1 and 10.7.2 have been revised to include this information.

DETAILS AND REASON

To improve the clamping of the main bearing cap to the cylinder block, Detroit Diesel has increased the bolt torque. The current torque of 160 lb·ft (217 N·m) was increased from the former torque value of 130 lb·ft (176 N·m). This improvement will provide a uniform bolt load on the main bearing cap. This improved bolt torquing should be performed on all engines when they are overhauled.

NOTICE:
Main bearing cap bolts are considered single-use items and **must** *not be reused* if removed for any reason. Always use new bolts when installing the main bearing caps. Failure to observe this precaution may result in improper bolt torque, bolt loosening or breakage during engine operation, and severe engine damage. New bolts should be clean and dry before applying a thin coat of engine oil to the threads of the bolts prior to installation.

ADDITIONAL SERVICE INFORMATION

Additional service information is available in the Detroit Diesel *Series 40 Service Manual*, 6SE44. The next revision to this manual will include the revised information. As a convenience to holders of the *Series 40 Service Manual*, information in service manual format is attached. The page(s) may be inserted into the manual.

DETROIT DIESEL

SERIES 40™ Service Information

NUMBER: 1-**40**-99 **S.M. REF.:** Refer to Section 9 **ENGINE:** 40 **DATE:** September 1999

SUBJECT: IMPROVED TWO-PIECE PISTON ASSEMBLY

INTRODUCTION

An improved two-piece, articulated piston assembly is installed in all Series 40™ mechanical engines rated at 300 hp and above. This change took effect with Series 40 engine serial number 1034668.

DETAILS AND REASON

The top, ring-carrying portion of the piston is the piston crown and the bottom is the piston skirt. The crown and skirt are held onto the connecting rod by a polished piston pin installed in the skirt. The pin is retained in the skirt by two spring clips. Former and current piston crown and skirt numbers are listed in Table 1.

Former Part Number	Current Part Number	Description
1819196C2	1829847C1	Piston Crown
1822501C1	1826414C1	Piston Skirt

Table 1 Piston Crown and Skirt Part Numbers

The improved piston assembly incorporates a slightly offset piston pin bore. For this reason the crown and skirt must be oriented properly when the piston is assembled. The piston crown has a nib (obstruction block) on one of the piston pin bosses, and the skirt has a raised triangle as part of the casting. When assembling the piston, the triangle on the skirt *must* be lined up with the nib on the crown. See Figure 1.

NOTICE:
Failure to assemble the piston with the raised, formed triangle on the skirt lined up with the nib on the piston crown will result in piston slapping, which may cause cylinder kit damage.

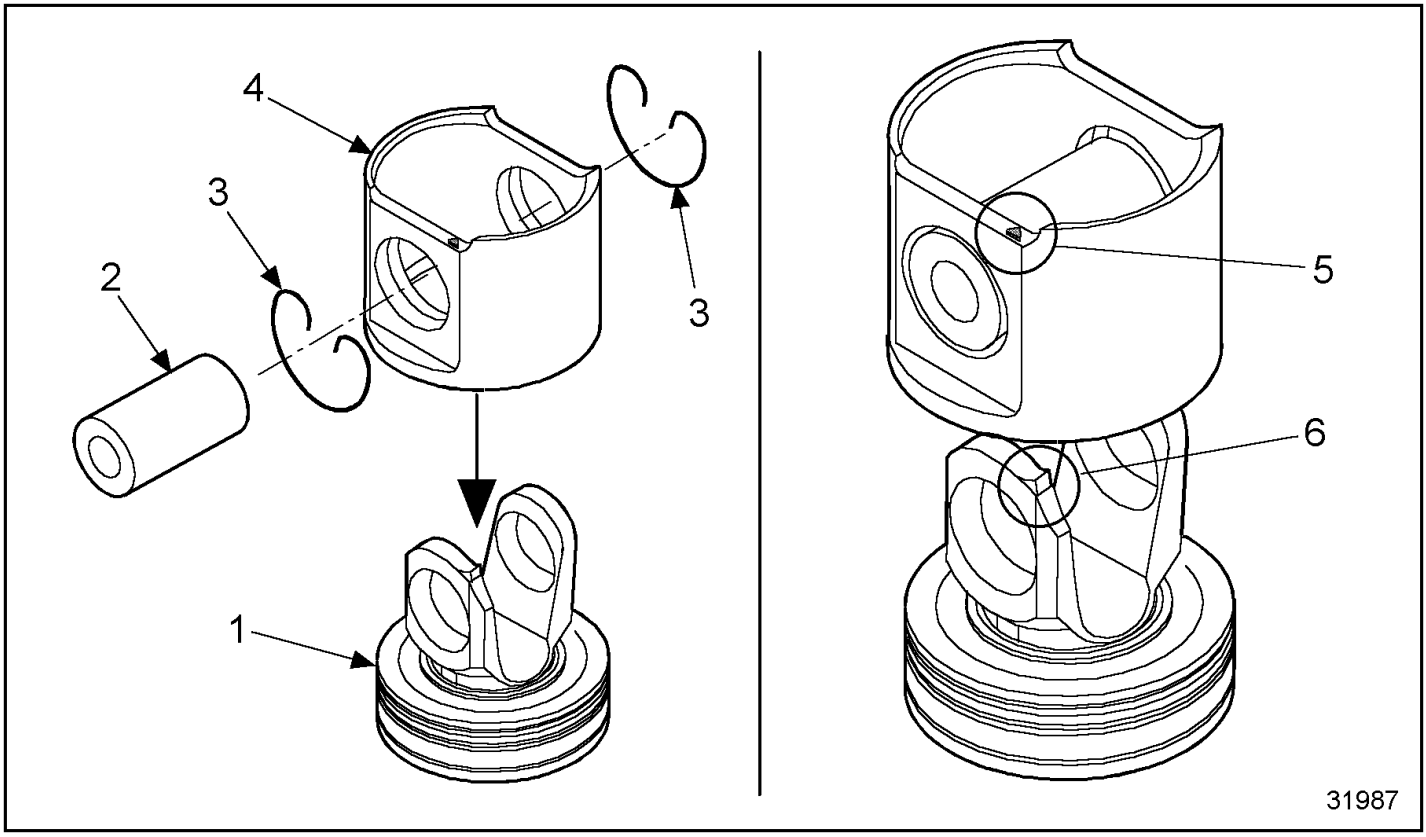

1. Piston Crown
2. Piston Pin
3. Snap Ring
4. Piston Skirt
5. Raised Triangle
6. Piston Pin Boss (side with nib)

Figure 1 Two-Piece Piston Assembly

DETROIT DIESEL

SERIES 40E™ Service Information

NUMBER: 1–**40E**–00 **S.M. REF.:** Information Only **ENGINE:** 40E **DATE:** May 2000

SUBJECT: INTAKE VALVE STEM CHROME PLATED

INTRODUCTION

Intake valve stems are now fully chrome plated to improve wear characteristics.

DETAILS AND REASON

To improve wear characteristics, new intake valves with fully chrome-plated valve stems have replaced the former valves with flash-chromed valve stems. This change took effect on engines built approximately July 1998.

NOTE:
Exhaust valves are not affected, since these have always had fully chromed valve stems.

Former and current valves and the cylinder head assemblies which incorporate the intake and exhaust valves are listed in Table 1.

Former Part No.	Current Part No.	Description
1823875C1	1823875C2	Intake Valve
1823882C94	1823882C96	Cylinder Head Asm.(Includes valves)

Table 1 Former and Current Intake Valves and Cylinder Heads

INTERCHANGEABILITY AND SERVICE

Former and current intake valves and cylinder head assemblies are completely interchangeable, and only the current parts will be serviced.

DETROIT DIESEL

SERIES 40E™ Service Information

NUMBER: 1–**40E**–01 **S.M. REF.:** 4.2.1.1 **ENGINE:** 40E **DATE:** July 2001

SUBJECT: UPDATED INSPECTION REQUIREMENTS FOR WATER PUMP REPLACEMENT

INTRODUCTION

Detroit Diesel now also recommends checking the rear half of the front cover when replacing the water pump.

NOTE:
When a water pump bearing failure occurs, the rear half of the front cover may sustain damage in the area behind the water pump impeller.

DETAILS AND REASON

To determine if the rear half of the front cover is still meets rebuild requirements, use the following procedure.

1. Measure the deepest groove in the damaged area with a caliper. See Figure 1. Maximum allowable depth is 3.05 mm (0.120 in.).

NOTE:
Typically, the outer region of the grooved damaged area has the deepest gouging.

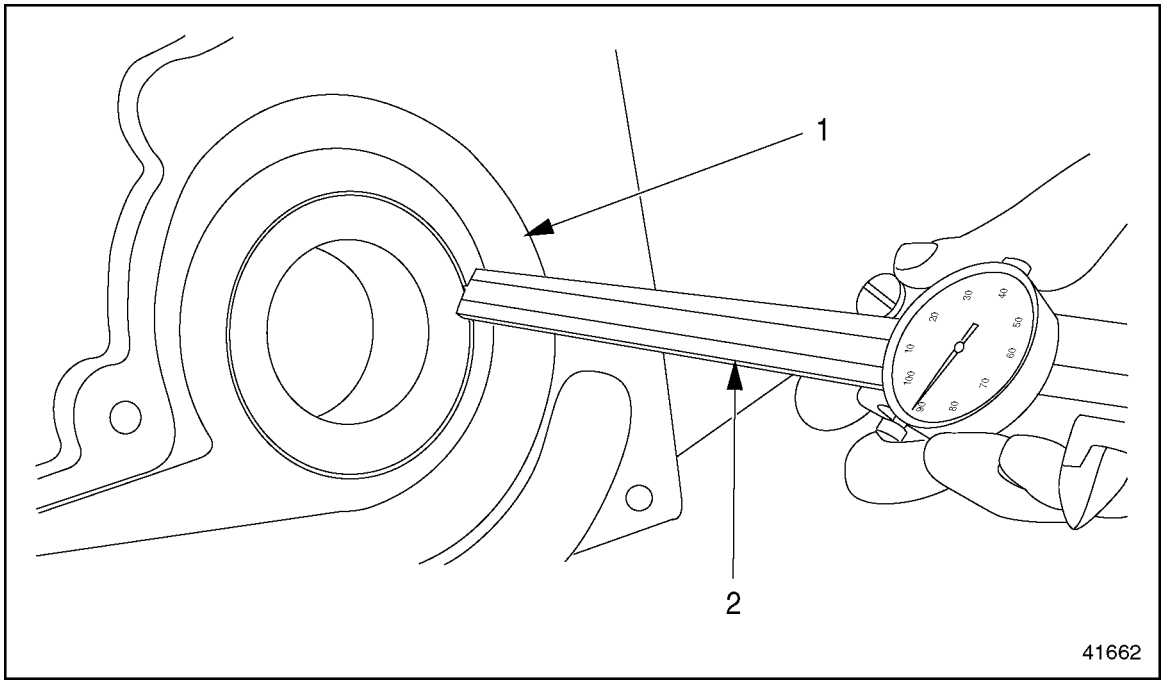

1. Front Cover
2. Caliper

Figure 1 Measurement of Deepest Front Cover Groove

2. If groove depth exceeds 3.05 mm (0.120 in.), replace the front cover. Refer to section 1.21 .

ADDITIONAL SERVICE INFORMATION

Additional service information is available in the Detroit Diesel *Series 40E Service Manual*, 6SE242. The next revision to this manual will include the revised information. As a convenience to holders of the *Series 40E Service Manual*, information in service manual format is attached. The page(s) may be inserted into the manual.

DETROIT DIESEL

SERIES 40E™ Service Information

NUMBER: 2–**40E**–00 **S.M. REF.:** Information Only **ENGINE:** 40E **DATE:** May 2000

SUBJECT: IMPROVED AIR INTAKE MANIFOLD ELBOW

INTRODUCTION

A high-strength, formed air intake manifold elbow has replaced the former jointed elbow on all Series 40E engines rated at 250 horsepower and above. This change took effect with January 2000-build engines.

DETAILS AND REASON

Effective with January 2000-build engines, a high-strength, formed air intake manifold elbow (boot) replaced the former jointed rubber elbow on all Series 40E engines rated at 250 horsepower and above. See Figure 1.

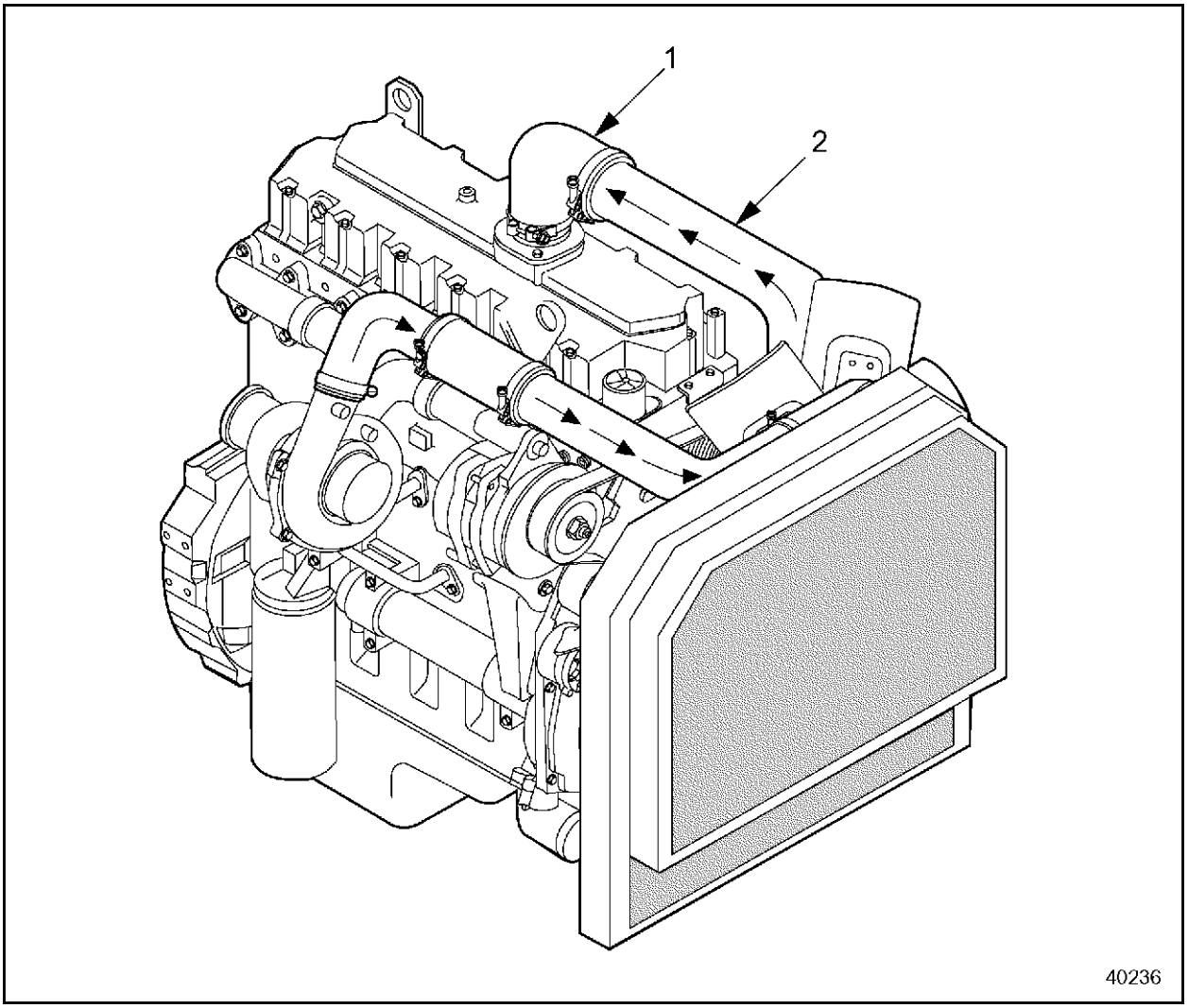

1. Air Intake Manifold Elbow
2. Charge Cooler Air Outlet Pipe

Figure 1 Location of Air Intake Manifold Elbow

The new formed air intake elbow is made of orange-colored, fiberglass-reinforced silicone rubber that is more resistant to the increased air inlet pressures encountered in higher horsepower engines. The

former jointed elbow is made of black rubber hose material bonded to a right-angle, hard rubber center section. Part numbers are listed in Table 1.

Former Part No.	New Part No.	Description
2004161C1	–	Elbow, Air Intake Manifold (Jointed Rubber, Black)
–	23523938	Elbow, Air Intake Manifold (Formed Fiberglass-reinforced Silicone Rubber, Orange)

Table 1 Former and New Air Intake Manifold Elbows

INTERCHANGEABILITY AND SERVICE

The former and new air intake manifold elbows are completely interchangeable, and both will be serviced. However, only the new formed elbow and should be used on Series 40 engines rated at 250 horsepower and above. Engines rated at less than 250 horsepower should continue to use the former jointed elbow.

NOTE:
The former elbow will be exhausted in production and service. Upon exhaustion, only the new elbow and will be available for use on Series 40E engines.

ADDITIONAL SERVICE INFORMATION

Additional service information is available in the Detroit Diesel *Series 40E Service Manual*, 6SE242. The next revision to this manual will include the revised information. As a convenience to holders of the *Series 40E Service Manual*, information in service manual format is attached. The page(s) may be inserted into the manual.

NOTE:
Manual insert pages are numbered for insertion into the current *Series 40E Service Manual* dated August 1998. Service manuals are available from authorized Detroit Diesel distributors. If this bulletin was obtained from the Internet, service manual page(s) are available by returning to the screen “SIB Index”, selecting attachment pages, and printing the page(s).

DETROIT DIESEL CORPORATION

13400 Outer Drive, West / Detroit, Michigan 48239-4001
Telephone: 313-592-5000
www.detroitdiesel.com

Detroit Diesel®, DDC® and the spinning arrows design are registered trademarks of Detroit Diesel Corporation. Series 40E™ is a trademark of Detroit Diesel Corporation.
© Copyright 2000 Detroit Diesel Corporation. All rights reserved. Printed in U.S.A.

DETROIT DIESEL

SERIES 40E™ Service Information

NUMBER: 3–**40E**–00 **S.M. REF.:** 2.5 **ENGINE:** 40E **DATE:** June 2000

SUBJECT: APPLY DIELECTRIC GREASE TO ECM CONNECTORS BEFORE INSTALLING

INTRODUCTION

The application of dielectric grease to the ECM (electronic control module) wiring harness connectors on Series 40E™ engines before installation can help prevent the intrusion of moisture into the connections, ensuring efficient ECM/engine operation.

DETAILS AND REASON

The intrusion of moisture into the ECM wiring harness connections on Series 40E engines may result in inefficient engine operation and/or the logging of false trouble codes. To help eliminate the potential for moisture intrusion, a quality dielectric grease should be used between the connectors and the ECM. Effective immediately, the following procedure should be used when attaching the wiring harness connectors to the ECM:

NOTICE:
Do not use bearing grease or other non-dielectric grease on the ECM connectors, since this may result in improper terminal contact and inefficient ECM/engine operation.

1. Apply a 3/8 in. bead of quality dielectric grease, such as Navistar® part number 1831731C1* or equivalent, to each ECM wiring harness connector. Use approximately 1/4 ounce of dielectric grease on each connector. Begin applying from the bolt, and move toward the ends of the ECM connector. See Figure 1.

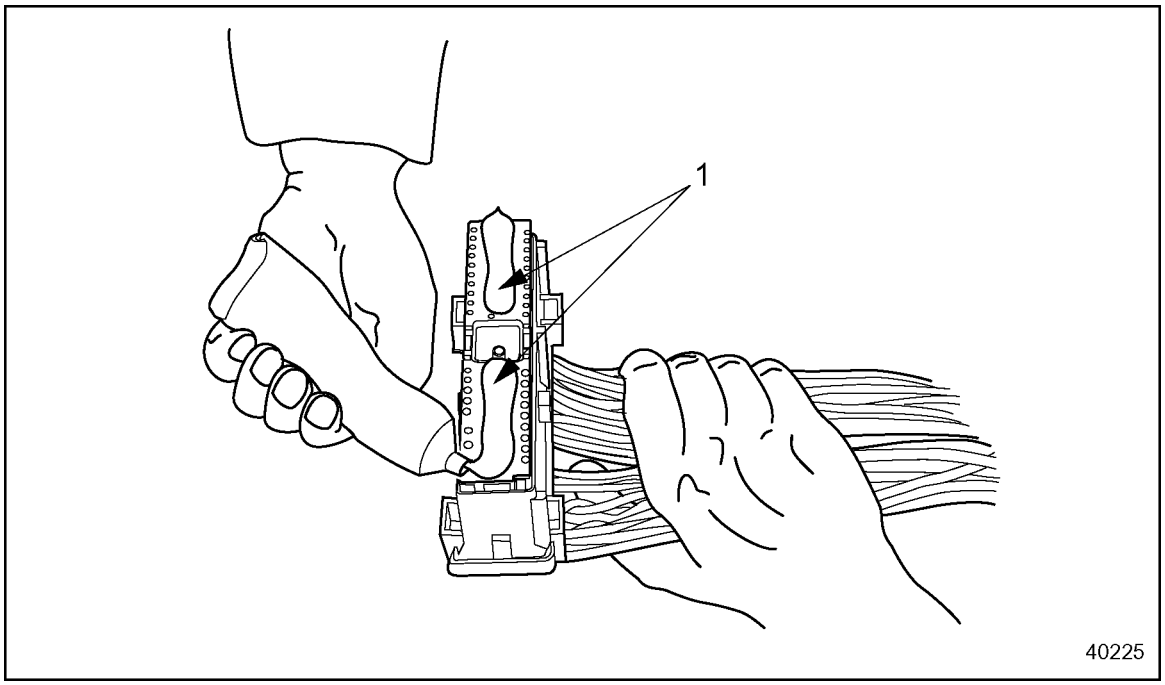

1. Location of Dielectric Grease

Figure 1 Application of Dielectric Grease to ECM Connector

2. Install the connector into the ECM. The dielectric grease will coat the terminals and overflow the sides of the connector, producing a moisture-tight seal.
3. Tighten connector screw to 40 lb-in (4.5 N·m).

NOTE:
The 35 lb-in (3.9 N·m) torque formerly shown in the *Series 40E Service Manual* should no longer be used when tightening the connector screw. The 40 lb-in (4.5 N·m) torque should be used to provide an improved connection.

* Dielectric grease part number 1831731C1 is available from authorized Navistar parts distributors. It is not marketed by Detroit Diesel parts distributors.

DETROIT DIESEL

SERIES 40E™ Service Information

NUMBER: 4–**40E**–00 **S.M. REF.:** Information Only **ENGINE:** 40E **DATE:** July 2000

SUBJECT: COOLING SYSTEM SURFACE OXIDATION

INTRODUCTION

This Service Information Bulletin provides information and guidance regarding cooling system oxidation (rust).

DETAILS AND REASON

DDC® production engine testing utilizes a central cooling system for all series of engines. Inherent in such a production test cooling system is a residual amount of metallic residue called “fines” that originate from the engine components that contact the coolant during production testing. These “fines” are held in suspension within the engine coolant. After testing and draining of the engine cooling system, some of the “fines” can remain on internal surfaces where, once any remaining coolant has evaporated, they oxidize and form a layer on the internal surfaces.

If the layer of oxidized “fines” can be easily removed with a cloth saturated with a 50/50 mixture of ethylene glycol and water, these internal layers of oxidized “fines” will neither interfere with heat transfer to the coolant, nor have any detrimental effect on engine performance. When the engine cooling system, with this level of oxidation, is filled with a 50/50 mixture of ethylene glycol, the oxidized layer will be stripped from the internal surfaces. The “fines” will then once again be held in suspension within the coolant where they will have no detrimental effect on engine performance.

Testing for Surface Oxidation

Convenient surfaces to test for the extent of oxidation (rust) are in the water pump inlet and the thermostat housing outlet to the radiator or to the marine heat exchanger. The following guidelines are to be used for determining an acceptable layer of oxidation:

1. If moderate rubbing with a cloth saturated with a 50/50 mixture of ethylene glycol and water removes the oxidation, the oxidation layer is considered *acceptable*.
2. If more than moderate rubbing with a cloth saturated with a 50/50 mixture of ethylene glycol and water is required to remove the oxidation, the oxidation layer is considered *unacceptable* and consideration should be given to flushing the cooling system with DDC Powercool® 2001 on-line cleaner.

DETROIT DIESEL

SERIES 53 Service Information

NUMBER: 1-**53**-99 **S.M. REF.:** Refer to Section 2 **ENGINE:** 53 **DATE:** November 1999

SUBJECT: FUEL INJECTOR TESTING

INTRODUCTION

Detroit Diesel has received an increased number of new and reliabilt® remanufactured fuel injectors that have been returned due to poor fuel atomization and fuel leakage when tested on the Kent-Moore® POP stand tool number J34760-147A. This has resulted in a new policy regarding fuel injector testing prior to installation into the engine.

NOTE:

Sections 2.1, 2.1.1, 2.0 of the *Series 53 Service Manual* have been revised and new section 2.1.2 has been added with this change.

DETAILS AND REASON

Detroit Diesel has determined that fuel injectors returned to Detroit Diesel because of poor fuel atomization and fuel leakage when tested on the Kent Moore® POP stand tool number J34760-147A were in fact acceptable. The failure of these fuel injectors has been the result of contaminated fuel used during the test prior to installation into the engine. The Detroit Diesel policy is **not** to test new or reliabilt® remanufactured fuel injectors prior to installation into the engine.

The Kent-Moore POP stand tool number J34760-147A should **only** be used as a **diagnostic tool** on suspected fuel injectors that have been removed from an engine. It should not be used on new or reliabilt® remanufactured injectors prior to installation into the engine.

ADDITIONAL SERVICE INFORMATION

Additional service information is available in the Detroit Diesel *Series 53 Service Manual*, 6SE202. The next revision to this manual will include the revised information. As a convenience to holders of the *Series 53 Service Manual*, information in service manual format is attached. The page(s) may be inserted into the manual.

NOTE:

Manual insert pages are numbered for insertion into the current *Series 53 Service Manual* dated May 1990. Service manuals are available from authorized Detroit Diesel distributors. If this bulletin was obtained from the Intent, service manual page(s) are available by returning to the screen “SIB Index”, selecting attachment pages, and printing the page(s).

DETROIT DIESEL®

SERIES 60® Service Information

NUMBER: 12-**60**-99 **S.M. REF.:** Refer to Section 2.3 **ENGINE:** 60 **DATE:** August 1999

SUBJECT: ELECTRONIC FUEL INJECTOR TESTING

INTRODUCTION

Detroit Diesel has received an increased number of new and reliabilt® remanufactured electronic fuel injectors that have been returned due to poor fuel atomization and fuel leakage when tested on the Kent-Moore® EUI POP stand. This has resulted in a new policy regarding electronic fuel injector testing prior to installation into the engine.

DETAILS AND REASON

It has been determined that electronic fuel injectors returned to Detroit Diesel because of poor fuel atomization and fuel leakage when tested on the Kent Moore® EUI POP stand were in fact acceptable. The failure of these fuel injectors has been the result of contaminated fuel used during the test prior to installation into the engine. The Detroit Diesel policy is **not** to test new or reliabilt® remanufactured electronic fuel injectors prior to installation into the engine.

The Kent-Moore POP stand should **only** be used as a **diagnostic tool** on suspected fuel injectors that have been *removed* from an engine. It should not be used on new or reliabilt® remanufactured injectors prior to installation into the engine.

ADDITIONAL SERVICE INFORMATION

Additional service information is available in the Detroit Diesel *Series 60 Service Manual*, 6SE483. The next revision to this manual will include the revised information. As a convenience to holders of the *Series 60 Service Manual*, information in service manual format is attached. The page(s) may be inserted into the manual.

NOTE:

Manual insert pages are numbered for insertion into the current *Series 60 Service Manual* dated January 1999. Service manuals are available from authorized Detroit Diesel distributors. If this bulletin was obtained from the Internet, service manual page(s) are available by returning to the screen “SIB Index,” selecting attachment pages, and printing the page(s).

DETROIT DIESEL

SERIES 60® Service Information

NUMBER: 13-**60**-98 **S.M. REF.:** 4.6.5 **ENGINE:** 60 **DATE:** June 1998

SUBJECT: SERVICE MANUAL PAGE REVISION - SECTION 4.6.5

INTRODUCTION

Detroit Diesel has revised the *Series 60 Service Manual* regarding the servicing of the engine water pump.

DETAILS AND REASON

The *Series 60 Service Manual* incorrectly showed a "**NOTICE"** in section 4.6.5 regarding the removal of the water pump locknut and impeller. This notice has been removed. In addition, Texaco ® Premium RB grease has been replaced by Mobilgrease ® HP.

ADDITIONAL SERVICE INFORMATION

Additional service information is available in the Detroit Diesel *Series 60 Service Manual*, 6SE483. The next revision to this manual will include the revised information. As a convenience to holders of the *Series 60 Service Manual*, information in service manual format is attached. The page(s) may be inserted into the manual.

NOTE:

Manual insert pages are numbered for insertion into the current *Series 60 Service Manual* dated October 1996. Service manuals are available from authorized Detroit Diesel distributors. If this bulletin was obtained from the Internet, service manual page(s), are available by returning to the screen "Getting Started", selecting attachment pages, and printing the page(s).

DETROIT DIESEL®

SERIES 60® Service Information

NUMBER: 3–**60**–01 **S.M. REF.:** 6.8 **ENGINE:** 60 **DATE:** March 2001

SUBJECT: RELEASE OF NEW GARRETT® GTA40 AND GTA42 TURBOCHARGERS TO SERIES 60 ENGINES

INTRODUCTION

Detroit Diesel has found a fixed number turbochargers with compressor wheel failures. As a result, current Series 60 engines with Garrett GT40 and GT42 turbochargers will be replaced by a newly designed GTA40 and GTA42 turbochargers. This change went into effect in April 2000.

DETAILS AND REASON

Detroit Diesel now installs the new GTA40 and GTA42 turbochargers on Series 60 applications. After exhaustion of old stock, the new part number may be used to service the old part number in all groups where the original part number was used. See Figure 1 for old and new turbocharger part numbers.

NOTE:
The difference between a GT and a GTA turbocharger, is that, a GTA tubrocharger has a new CHRA (center housing rotating assembly) with a boreless compressor wheel. The servicing of these two turbochargers remains identical.

Old Turbo model	Old Turbo p/n	Old DDC p/n	Obsolete Date	New Turbo model	New Turbo p/n	New DDC p/n	Applications	New DIBS DESCR
GT4294JN	471087-3	23519317	4/17/00	GTA4294BN		23528031	S50 8.5L 350hp 1996-1997	TURB ASM GTA4294BN 1.01A/R EXH RR
GT4294DEJN	700228-05	23520922	4/17/00	GTA4294BDN		23528033	S50 8.5L 275 - 320hp 1997-98, 350 hp 99+	TURB ASM GTA4294BDN 0.91A/R S50
GT4294DEJN	700228-09	23521368	4/17/00	GTA4294BDN		23528034	S50 8.5L 275 - 320hp 1997-98, 350 hp 99+	TURBOCHARGER ASM GTA4294BDN 0.91A/R SHORT CAN S50
GT4294DEJN	700228-15	23522392	4/17/00	GTA4294BDN		23528042	S50 8.5L 275 - 320hp 1997 - 1998	TURB ASM GTA4294BDN 0.91A/RS50
GT4294JNS	712234-1	23526107	4/17/00	GTA4294BNS		23528041	S50 8.5L 1999+ Non-road	TURB ASM GTA4294BNS 1.28A/R LONG CAN S50
GT4202JNSU	702468-2	23522190	4/24/00	GTA4202BNS		23528059	S60 12.7L 500hp, 1998 +	TURB ASM GTA4202BNS 1.15 A/R 53 TRIM 31 PSI MED&HI MT 12L S60
GT4202DJNU	702303-2	23522191	4/24/00	GTA4202BDN		23528060	S60 12.7L 500hp, 1998 +	TURB ASM GTA4202BDN 1.15 A/R 53 TRIM 31 PSI LOW MT 12L S60
GT4202JNSU	702885-1	23522312	4/24/00	GTA4202BNS		23528062	S60 12.7L 500hp, 1998 +	TURB ASM GTA4202BNS 1.15A/R 53 TRIM 31 PSI MED&HI MT 12L S60
GT4202DJNU	703768-2	23523478	4/24/00	GTA4202BDN		23528063	S60 12.7L 500hp, 1998 +	TURB ASM GTA4202D 1.15 A/R DUAL BYPASS HORZ CAN S60 A
GT4202JNSU	702468-3	23526271	4/24/00	GTA4202BNS		23528064	S60 12.7L 500hp, 1998 +	TURB ASM GTA4202BNS 1.15A/R MED&HI MT NOISE SUPPRESSED 12L S60
GT4288DEJN	702690-3	23522763	5/1/00	GTA4288BDN		23528043	S50 8.5L 275-320hp 1998	TURB ASM GTA4288BDN 0.91A/R 78 TRIM S50
GT4088DEJN	706156-1	23524013	5/8/00	GTA4088BDN		23528035	S50 8.5L Up to 320hp, 1999+	TURB ASM GTA4088BDN 1.05A/R
GT4088DEJN	706156-2	23524014	5/8/00	GTA4088BDN		23528037	S50 8.5L Up to 320hp, 1999+	TURB ASM GTA4088BDN 1.05A/R S50
GT4088DEJN	706156-3	23524015	5/8/00	GTA4088BDN		23528038	S50 8.5L Up to 320hp, 1999+	TURB ASM GTA4088BDN 1.05A/R S50
GT4088DEJN	706156-5	23524017	5/8/00	GTA4088BDN		23528039	S50 8.5L Up to 320hp, 1999+	TURB ASM GTA4088BDN 1.05A/R S50
GT4088DEJN	706156-6	23524809	5/8/00	GTA4088BDN		23528040	S50 8.5L Up to 320hp, 1999+	TURBO ASM GTA4088BDN 0.91A/R SHORT CAN S50
GT4294JNS	702015-1	23522188	5/15/00	GTA4294BNS		23528065	S60 12.7L 350-430hp 1998+	TURB ASM GTA42BNS/K31 MED&HI MT 12L S60
GT4294DEJN	700228-03	23522189	5/15/00	GTA4294BDN		23528066	S60 12.7L 350-430hp 1998+	TURB ASM GTA4294BDN 1.28 A/R 56 TRIM 31 PSI LOW MT 12L S60
GT4294JNS	702284-1	23522306	5/15/00	GTA4294BNS		23528067	S60 12.7L 350-430hp 1998+	TURB ASM GTA4294BNS 1:28 A/R TRIM 31 PSI MED&HI MT 12L S60
GT4294DEJN	703767-2	23523039	5/15/00	GTA4294BDN		23528089	S60 12.7L 350-430hp 1998+	TURB ASM GTA4294BDN 1.28A/R DUAL BYPASS HORIZ CAN 12L STD S60
GT4294DEJN	703767-4	23523477	5/15/00	GTA4294BDN		23528068	S60 12.7L 350-430hp 1998+	TURB ASM GTA4294BDN 1.28 A/R DUAL BYPASS HORZ CAN S60 A
GT4294JNS	702015-3	23526272	5/15/00	GTA4294BNS		23528069	S60 12.7L 350-430hp 1998+	TURB ASM GTA42BNS 1.28A/R MED&HI MT NOISE SUPPRESSED 12L S60
GT4294JNS	702015-5	23526679	5/15/00	GTA4294BNS		23528052	S60 12.7L 330 - 350hp 2000	TURB ASM GTA4294BNS 1.15A/R 31PSI VERT CAN MED&HI 12L S60 330/350
GT4294DEJN	700228-20	23526680	5/15/00	GTA4294BDN		23528053	S60 12.7L 330 - 350hp 2000	TURB ASM GTA4294BDN 1.15A/R 31PSI VERT CAN LO MT 12L S60 330/350
GT4294JNS	702284-7	23526681	5/15/00	GTA4294BNS		23528054	S60 12.7L 330 - 350hp 2000	TURB ASM GTA4294S 1.15A/R 31PSI HORIZ CAN MED&HI 12L S60 330/350
GT4294JNS	702284-8	23526682	5/15/00	GTA4294BNS		23528055	S60 12.7L 330 - 350hp 2000	TURB GTA4294S 1.15A/R HORIZ HI MT EXH FWD SCRL DWN 12LS60 330/350
GT4294DEJN	703767-5	23526683	5/15/00	GTA4294BDN		23528056	S60 12.7L 330 - 350hp 2000	TURB GTA4294BDN 1.15A/R HORIZ LO MT DUAL BYPASS 12L S60 330/350
GT4294DEJN	703767-6	23526684	5/15/00	GTA4294BDN		23528057	S60 12.7L 330 - 350hp 2000	TURB GTA4294BDN 1.15A/R HORIZ MED MT DUAL BYPASS 12L S60 330/350
GT4294JNS	702015-6	23526685	5/15/00	GTA4294BNS		23528058	S60 12.7L 330 - 350hp 2000	TURB ASM GTA4294BNS 1.15A/R VERT MED&HI NOISE SUPPR 12LS60 330/350
GT4294JN	471087-1	23518695	5/22/00	GTA4294BN		23528029	S60 11.1L On-highway 95-97, off-road 98+	TURB ASM GTA4294BN 1.15 A/R MED&HI 11L S60
GT4294JNS	702015-2	23522194	5/29/00	GTA4294BNS		23528045	S60 11.1L 365hp 1998-1999	TURB ASM GTA4294BNS 1.01 A/R 52 TRIM 27 PSI MED&HI MT 11L S60
GT4294DEJN	700228-13	23522195	5/29/00	GTA4294BDN		23528046	S60 11.1L 365hp 1998-1999	TURB ASM GTA4294BDN 1.01 A/R 52 TRIM 27 PSI LOW MT 11L S60
GT4294JNS	702284-2	23522300	5/29/00	GTA4294BNS		23528047	S60 11.1L 365hp 1998-1999	TURB ASM GTA4294BNS 1:01 A/R TRIM 27 PSI MED&HI MT 11L S60
GT4294JNS	702284-4	23522780	5/29/00	GTA4294BNS		23528049	S60 11.1L 365hp 1998-1999	TURB GTA4294 1.01A/R SCRL DWN HI MT 11L EXH FWD
GT4294DEJN	703767-1	23523038	5/29/00	GTA4294BDN		23528050	S60 11.1L 365hp 1998-1999	TURB ASM GTA4294BDN 1.01A/R DUAL BYPASS HORIZ CAN 11L S60
GT4294DEJN	703767-3	23523476	5/29/00	GTA4294BDN		23528051	S60 11.1L 365hp 1998-1999	TURB ASM GTA4294BDN 1.01 A/R DUAL BYPASS HORZ CAN S60 I
GT4294JNS	702284-3	23522781	3/31/00	GTA4294BNS	714789-3	23528511	S50/60	
GT4202JNU	703768-1	23523040	3/31/00	GTA4202BDN	714796-1	23528512	S50/60	

release.xls

41206

Figure 1 Old to New Turbocharger Part Numbers

DETROIT DIESEL®

SERIES 60® Service Information

NUMBER: 6-**60**-00 **S.M. REF.:** 1.29 **ENGINE:** 60 **DATE:** March 2000

SUBJECT: VALVE STEM-TO-VALVE GUIDE CLEARANCE

INTRODUCTION

Detroit Diesel has revised the acceptable clearance dimensions of the valve stem-to-valve guide on diesel fueled Series 60 engines. This change went into effect on August 8, 1999.

DETAILS AND REASON

Detroit Diesel recently increased the diameter of exhaust valve stems, which has affected the clearance dimension between the valve stem and valve guide. This change requires the updating of service manual Specification Section 1.29 to include the new acceptable limits.

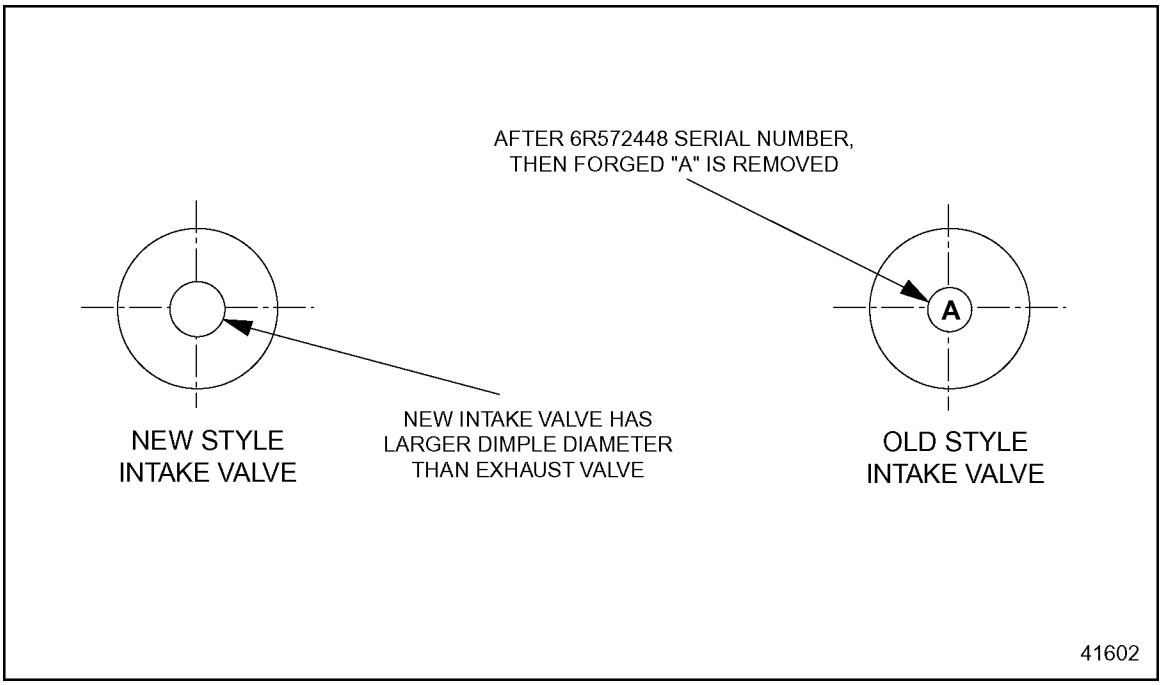

Figure 2 Intake Valve Identification

ADDITIONAL SERVICE INFORMATION

Additional service information is available in the Detroit Diesel *Series 60 Service Manual*, 6SE483. The next revision to this manual will include the revised information. As a convenience to holders of the *Series 60 Service Manual*, information in service manual format is attached. The page(s) may be inserted into the manual.

NOTE:
Manual insert pages are numbered for insertion into the current *Series 60 Service Manual* dated October 2000. Service manuals are available from authorized Detroit Diesel distributors. If this bulletin was obtained from the Internet, service manual page(s) are available by returning to the screen “SIB Index”, selecting attachment pages, and printing the page(s).

DETROIT DIESEL CORPORATION

13400 Outer Drive, West / Detroit, Michigan 48239-4001
Telephone: 313-592-5000
www.detroitdiesel.com

Detroit Diesel®, DDC®, Series 60® and the spinning arrows design are registered trademarks of Detroit Diesel Corporation.
© Copyright 2001 Detroit Diesel Corporation. All rights reserved. Printed in U.S.A.

DETROIT DIESEL®

Inline 71 SERIES Service Information

NUMBER: 3-**71**-99 **S.M. REF.:** Refer to Section 2.3 **ENGINE:** 71 **DATE:** December 1999

SUBJECT: MECHANICAL AND ELECTRONIC FUEL INJECTOR TESTING

INTRODUCTION

Detroit Diesel has received an increased number of new and *reliabilt*® remanufactured mechanical and electronic fuel injectors that have been returned due to poor fuel atomization and fuel leakage when tested on the Kent-Moore® POP stand. This has resulted in a new policy regarding fuel injector testing prior to installation into the engine.

DETAILS AND REASON

It has been determined that fuel injectors returned to Detroit Diesel because of poor fuel atomization and fuel leakage when tested on the Kent Moore® POP stand were in fact acceptable. The failure of these fuel injectors has been the result of contaminated fuel used during the test prior to installation into the engine. The Detroit Diesel policy is **not** to test new or *reliabilt*® remanufactured electronic fuel injectors prior to installation into the engine.

The Kent-Moore POP stand should **only** be used as a **diagnostic tool** on suspected fuel injectors that have been *removed* from an engine. It should not be used on new or *reliabilt*® remanufactured injectors prior to installation into the engine.

ADDITIONAL SERVICE INFORMATION

Additional service information is available in the Detroit Diesel *Series71 Service Manual*, 6SE164. The next revision to this manual will include the revised information. As a convenience to holders of the *Series 71 Service Manual*, information in service manual format is attached. The page(s) may be inserted into the manual.

NOTE:

Manual insert pages are numbered for insertion into the current *Series 71 Service Manual* dated May 1994. Service manuals are available from authorized Detroit Diesel distributors. If this bulletin was obtained from the Internet, service manual page(s) are available by returning to the screen "SIB Index", selecting attachment pages, and printing the page(s).

DETROIT DIESEL ®

V-71 SERIES Service Information

NUMBER: 3-**V71**-99 **S.M. REF.:** Refer to Section 2.3 **ENGINE:** V-71 **DATE:** November 1999

SUBJECT: MECHANICAL AND ELECTRONIC FUEL INJECTOR TESTING

INTRODUCTION

Detroit Diesel has received an increased number of new and reliabilt® remanufactured mechanical and electronic fuel injectors that have been returned due to poor fuel atomization and fuel leakage when tested on the Kent-Moore® POP stand. This has resulted in a new policy regarding fuel injector testing prior to installation into the engine.

DETAILS AND REASON

It has been determined that fuel injectors returned to Detroit Diesel because of poor fuel atomization and fuel leakage when tested on the Kent Moore® POP stand were in fact acceptable. The failure of these fuel injectors has been the result of contaminated fuel used during the test prior to installation into the engine. The Detroit Diesel policy is **not** to test new or reliabilt® remanufactured fuel injectors prior to installation into the engine.

The Kent-Moore POP stand should **only** be used as a **diagnostic tool** on suspected fuel injectors that have been *removed* from an engine. It should not be used on new or reliabilt® remanufactured injectors prior to installation into the engine.

ADDITIONAL SERVICE INFORMATION

Additional service information is available in the Detroit Diesel *Series V-71 Service Manual*, 6SE193. The next revision to this manual will include the revised information. As a convenience to holders of the *Series V-71 Service Manual*, information in service manual format is attached. The page(s) may be inserted into the manual.

NOTE:

To provide coverage for electronic unit injectors used on V-71 engines, new EUI injector section 2.1.2 is included with this bulletin. Manual insert pages are numbered for insertion into the current *Series V-71 Service Manual* dated October 1989. Service manuals are available from authorized Detroit Diesel distributors. If this bulletin was obtained from the Internet, service manual page(s) are available by returning to the screen “SIB Index,” selecting attachment pages, and printing the page(s).

DETROIT DIESEL®

SERIES 92™ Service Information

NUMBER: 1–**92**–00 **S.M. REF.:** Information Only **ENGINE:** 92 **DATE:** January 2000

SUBJECT: MECHANICAL AND ELECTRONIC FUEL INJECTOR TESTING

INTRODUCTION

Detroit Diesel has received an increased number of new and *reliabilt*® remanufactured mechanical and electronic fuel injectors that have been returned due to poor fuel atomization and fuel leakage when tested on the Kent-Moore® POP stand. This has resulted in a new policy regarding fuel injector testing prior to installation into the engine.

DETAILS AND REASON

It has been determined that mechanical and electronic fuel injectors returned to Detroit Diesel because of poor fuel atomization and fuel leakage when tested on the Kent-Moore POP stand were, in fact, acceptable. The failure of these fuel injectors was the result of contaminated fuel being used during the test prior to installation into the engine. The policy of Detroit Diesel is ***not*** to test new or *reliabilt* remanufactured fuel injectors prior to installation into the engine.

The Kent-Moore POP stand should ***only*** be used as a **diagnostic tool** on suspected fuel injectors that have been ***removed*** from an engine. It should not be used on new or *reliabilt* remanufactured fuel injectors prior to installation into the engine.

DETROIT DIESEL

SERIES 149 Service Information

NUMBER: 5-**149**-99 **S.M. REF.:** Refer to Section 12.3 **ENGINE:** 149 **DATE:** May 1999

SUBJECT: INJECTOR TIMING UPDATE FOR DDEC ENGINES

INTRODUCTION

Detroit Diesel has updated the fuel injector timing chart for Series 149 DDEC® engines. The values in this chart must be used when the fuel injector timing is adjusted.

DETAILS AND REASON

Detroit Diesel has updated the fuel injector timing chart for DDEC® engines. When the engine performance or exhaust emissions appear to be a problem, a check of the injector timing should be made. The updated chart will provide the accurate setting dimensions to keep engine performance and exhaust emission levels at factory specifications.

ADDITIONAL SERVICE INFORMATION

Additional service information is available in the Detroit Diesel *Series149 Service Manual*, 6SE313. The next revision to this manual will include the revised information. As a convenience to holders of the *Series 149 Service Manual*, information in service manual format is attached. The page(s) may be inserted into the manual.

NOTE:

Manual insert pages are numbered for insertion into the current *Series 149 Service Manual* dated August 1997. Service manuals are available from authorized Detroit Diesel distributors. If this bulletin was obtained from the Internet, service manual page(s) are available by returning to the screen “SIB Index”, selecting attachment pages, and printing the page(s).

DETROIT DIESEL ®

SERIES 149 Service Information

NUMBER: 8-**149**-99 **S.M. REF.:** Refer to Section 2.2 **ENGINE:** 149 **DATE:** November 1999

SUBJECT: MECHANICAL FUEL INJECTOR TESTING

INTRODUCTION

Detroit Diesel has received an increased number of new and reliabilt® remanufactured mechanical fuel injectors that have been returned due to poor fuel atomization and fuel leakage when tested on the Kent-Moore® POP stand. This has resulted in a new policy regarding fuel injector testing prior to installation into the engine.

DETAILS AND REASON

It has been determined that fuel injectors returned to Detroit Diesel because of poor fuel atomization and fuel leakage when tested on the Kent Moore® POP stand were in fact acceptable. The failure of these fuel injectors has been the result of contaminated fuel used during the test prior to installation into the engine. The Detroit Diesel policy is **not** to test new or reliabilt® remanufactured mechanical fuel injectors prior to installation into the engine.

The Kent-Moore POP stand should **only** be used as a **diagnostic tool** on suspected fuel injectors that have been *removed* from an engine. It should not be used on new or reliabilt® remanufactured injectors prior to installation into the engine.

ADDITIONAL SERVICE INFORMATION

Additional service information is available in the Detroit Diesel *Series149 Service Manual*, 6SE313. The next revision to this manual will include the revised information. As a convenience to holders of the *Series 149 Service Manual*, information in service manual format is attached. The page(s) may be inserted into the manual.

NOTE:

Manual insert pages are numbered for insertion into the current *Series 149 Service Manual* dated August 1997. Service manuals are available from authorized Detroit Diesel distributors. If this bulletin was obtained from the Internet, service manual page(s) are available by returning to the screen “SIB Index,” selecting attachment pages, and printing the page(s).

DETROIT DIESEL ®

SERIES 149 Service Information

NUMBER: 9-**149**-99 **S.M. REF.:** Refer to Section 2.3 **ENGINE:** 149 **DATE:** November 1999

SUBJECT: ELECTRONIC FUEL INJECTOR TESTING

INTRODUCTION

Detroit Diesel has received an increased number of new and reliabilt® remanufactured electronic fuel injectors that have been returned due to poor fuel atomization and fuel leakage when tested on the Kent-Moore® POP stand. This has resulted in a new policy regarding fuel injector testing prior to installation into the engine.

DETAILS AND REASON

It has been determined that fuel injectors returned to Detroit Diesel because of poor fuel atomization and fuel leakage when tested on the Kent Moore® POP stand were in fact acceptable. The failure of these fuel injectors has been the result of contaminated fuel used during the test prior to installation into the engine. The Detroit Diesel policy is **not** to test new or reliabilt® remanufactured electronic fuel injectors prior to installation into the engine.

The Kent-Moore POP stand should **only** be used as a **diagnostic tool** on suspected fuel injectors that have been *removed* from an engine. It should not be used on new or reliabilt® remanufactured injectors prior to installation into the engine.

ADDITIONAL SERVICE INFORMATION

Additional service information is available in the Detroit Diesel *Series149 Service Manual*, 6SE313. The next revision to this manual will include the revised information. As a convenience to holders of the *Series 149 Service Manual*, information in service manual format is attached. The page(s) may be inserted into the manual.

NOTE:

Manual insert pages are numbered for insertion into the current *Series 149 Service Manual* dated August 1997. Service manuals are available from authorized Detroit Diesel distributors. If this bulletin was obtained from the Internet, service manual page(s) are available by returning to the screen “SIB Index,” selecting attachment pages, and printing the page(s).

DETROIT DIESEL

SERIES 149 Service Information

NUMBER: 10-**149**-99 **S.M. REF.:** Refer to Section 2.A **ENGINE:** 149 **DATE:** November 1999

SUBJECT: MECHANICAL AND ELECTRONIC FUEL INJECTOR TESTING

INTRODUCTION

Detroit Diesel has received an increased number of new and reliabilt® remanufactured mechanical and electronic fuel injectors that have been returned due to poor fuel atomization and fuel leakage when tested on the Kent-Moore® POP stand. This has resulted in a new policy regarding fuel injector testing prior to installation into the engine.

DETAILS AND REASON

It has been determined that fuel injectors returned to Detroit Diesel because of poor fuel atomization and fuel leakage when tested on the Kent Moore® POP stand were in fact acceptable. The failure of these fuel injectors has been the result of contaminated fuel used during the test prior to installation into the engine. The Detroit Diesel policy is **not** to test new or reliabilt® remanufactured mechanical and electronic fuel injectors prior to installation into the engine.

The Kent-Moore POP stand should **only** be used as a **diagnostic tool** on suspected fuel injectors that have been *removed* from an engine. It should not be used on new or reliabilt® remanufactured injectors prior to installation into the engine.

ADDITIONAL SERVICE INFORMATION

Additional service information is available in the Detroit Diesel *Series149 Service Manual*, 6SE313. The next revision to this manual will include the revised information. As a convenience to holders of the *Series 149 Service Manual*, information in service manual format is attached. The page(s) may be inserted into the manual.

NOTE:

Manual insert pages are numbered for insertion into the current *Series 149 Service Manual* dated August 1997. Service manuals are available from authorized Detroit Diesel distributors. If this bulletin was obtained from the Internet, service manual page(s) are available by returning to the screen “SIB Index,” selecting attachment pages, and printing the page(s).

DETROIT DIESEL

mtu® Service Bulletin Release

Date: September 2000

This release consists of the following:

- ☐ Bulletin index pages 1 through 9.
- ☐ Bulletin 1-MTU-00.

File pages in this release as follows:

1. Remove and discard former index pages 1 through 9. File new index pages in their place.
2. Using the index as a guide, remove and discard obsolete bulletin 16-MTU-96 Rev.. File new bulletin 1-MTU-00 behind the DDC/MTU tab divider.

DETROIT DIESEL CORPORATION

13400 West Outer Drive, Detroit, MI 48239-4001
Telephone: 313-592-5000
FAX: 313-592-7288

Detroit Diesel® and spinning arrows design are registered trademarks of Detroit Diesel Corporation. Series 2000™ and Series 4000™ are trademarks of Detroit Diesel Corporation.
MTU® is a registered trademark of MTU Motoren- und Turbinen Union-Friedrichshafen GmbH.
7SE309 0009 © Copyright 2000 Detroit Diesel Corporation. All rights reserved. Printed in U.S.A.

All year-2000 MTU service bulletins are listed in Table 1.

Bulletin Number	Reference Number	Bulletin Title	Date	File
1-MTU-00	A001061/23E	Fluids and Lubricants Specifications for MTU-Manufactured Diesel Engines	September 2000	DDC/MTU

Table 1 MTU Year 2000 Service Bulletin Index

All 1999 MTU service bulletins are listed in Table 2 .

Bulletin Number	Reference Number	Bulletin Title	Date	File
15-MTU-99	Information	Series 2000 Marine Raw Water Pump Inspection	October 1999	DDC/MTU
14-MTU-99	98/0562	Improved Governor Actuator	August 1999	DDC/MTU
13-MTU-99	2000-98/0025	Fuel Drain Line Supports Added to MTU-Manufactured Series 2000 Marine Engines	July 1999	DDC/MTU
12-MTU-99	RCS 98/006	Mannesmann/Rexford Control Lever Update Procedure	May 1999	General Information
11-MTU-99	Information	Improved Memory Module MEM6-01 on MTU-Manufactured Series 2000 Engines	May 1999	DDC/MTU
10-MTU-99	98/0078C	Flame Start System for 12V 183 TE93 Engines with Emergency Shut-Off Flaps and Fuel Heat Exchanger	May 1999	183
9-MTU-99	98/E0024	MCS-5 Model 1: Reprogramming Pan Control Panel	March 1999	DDC/MTU
8-MTU-99	98/E0027	Exhaust Gas Temperature Sensor	March 1999	DDC/MTU
7-MTU-99	98/E0028	Non-Isolated DC Transformers	March 1999	General Information

6-MTU-99	183-98/0078	Flame Start System for 8V 183 TE93 Engines without Emergency Shut-Off Flaps and without Fuel Heat Exchanger	March 1999	183
5-MTU-99	98/E0018	Starter Relay Improvement	March 1999	General Information
4-MTU-99	98/E0015	Speed Input Modification	March 1999	General Information
3-MTU-99	Info. Only	V-Belt Tensioning Adjustments	March 1999	General Information
2-MTU-99	98TS-01	Approved Lubrication Oil and Coolant	March 1999	General Information
1-MTU-99	RSM 10 11 97	Insufficient Lubrication After Major Maintenance or Winter La-up and Conversion of MCS-SI/MCS-LO Starting Systems for Engine Oil Priming	March 1999	183

Table 2 MTU 1999 Service Bulletin Index

All the 1998 MTU service bulletins are listed in Table 3.

Bulletin Number	Reference Number	Bulletin Title	Date	File
13-MTU-98	RSE 98/0014	ECU 1 and ECU 4-Possible Signal Oscillations at the Transistor Outputs	November 1998	DDC/MTU
12-MTU-98	98/E0019	LOP1-01 For German-Built Series 2000 and Series 4000-Unintentional Engine Starting	November 1998	DDC/MTU
11-MTU-98	183-98/0082	Coolant Thermostat Housing-Thermostats With 71°/65°C (160°/149°F) Response Temperatures	November 1998	183

10-MTU-98	RSM 183-98/0069	Coolant Pump Drive Monitor Retrofit Kit Released	November 1998	183
9-MTU-98	98 04 20	Glysacorr G93 Water-Soluble Corrosion Inhibitor Approved For Coolant Treatment	November 1998	DDC/MTU
8-MTU-98	RSM 07 07 97	Retrofitting an Oil Separator at the Crankcase Vent	January 1998	396
7-MTU-98 Rev.	RSM 23 05 97	Insufficient Lubrication After Major Maintenance or Winter Lay-up	April 2000	183
6-MTU-98	RSE 97 07 25	Malfunctions Due to Damaged Engine Cabling	January 1998	DDC/MTU
5-MTU-98	RSM 15 04 97	Improved Piston Ring Pliers	January 1998	General Information
4-MTU-98	RSM 02 06 97	New Cylinder Heads	January 1998	396
3-MTU-98	RSM 03 03 97	Do Not Use Hylomar® or Loctite® Sealants/Adhesives When Installing Flat Gaskets and O-Rings	January 1998	General Information
2-MTU-98	RSM 24 02 97	New Piston Crown Securing Screw	January 1998	396
1-MTU-98	MR183-95/0054A	Improved Inlet Valve	January 1998	183

Table 3 MTU 1998 Service Bulletin Index

All the 1997 MTU service bulletins are listed in Table 4.

Bulletin Number	Reference Number	Bulletin Title	Date	File
29-MTU-97	RSE 06.08.97	Introduction of New EEPROMS for Model MCU, CPS, PPS, etc. on MCS-5 Units with MPU24-01	October 1997	DDC/MTU

28-MTU-97	RSE 07.04.97	ECS Coupler: MCS-5, RCS-FFP-5A Printed Circuit Board MPU 23-XX Failure of MPU 23-XX with Windbond Memory Module Model 2464S-10L	October 1997	DDC/MTU
27-MTU-97	RSE 02.04.97	ECU-Malfunction Memory: Prevention of Faulty Interpretation of Engine Malfunctions	October 1997	DDC/MTU
26-MTU-97	RSE 02.04.97	ECS-UNI: Loose Screws in Flat Subassemblies (Printed Circuit Boards)	October 1997	DDC/MTU
25-MTU-97	M-B 51 88/89 11.11.93	Engine Starting and oil Fill Information—All Commercial Vehicles	October 1997	DDC/MTU
24-MTU-97 Rev.	RSM97/0530A	Edge-Type Filter Element—Supplementary Sealing Against Spray	January 1998	396
23-MTU-97	RSE 03.12.96	MCS-5: Sporadic Missing Data—"MD" Error Signal	October 1997	DDC/MTU
22-MTU-97	97TS-06	Approved Lubricating oil and Coolant for MTU Engines Used in North America	October 1997	DDC/MTU
21-MTU-97	MR 183-97/0070	Checking Installation of Vibration Dampers	October 1997	183
20-MTU-97	SR 183-97/0065	Exhaust Manifold Flange Screws	October 1997	183
19-MTU-97	RSM 27 07 95	Injection Nozzles: Ultrasonic Cleaning	October 1997	General Information
18-MTU-97	RSM 20.10.95 396-96/0527	Injection Pump/Multiple-Disk Clutch Enclosure	May 1997	396

17-MTU-97	RSM 20.10.95 (Replaces RSM 07.03.89)	Injector Retainer—Introduction of Thin-Walled Thrust Sleeve to Protect Cylinder Head Against Cracking at the Mating Face	May 1997	396
16-MTU-97	RSE 20.02.97 ECS-97/003	ECS-UNI Engien Governor, All Series—Increase of Power Limit for All ECS-UNI Systems	May 1997	396
15-MTU-97	SR396-97/0544	Compressed Air Starter	May 1997	396
14-MTU-97	RSE 19.07.96	ECS-UNI for Series 396 TE, TB Marine Applications—Urgent Verification of Repairs	May 1997	396
13-MTU-97	RSM 06 06 95	Monitoring Equipment: Indication of Coolant Temperature	January 1997	183
12-MTU-97	RSE 13 12 96	ECS-UNI: Counter Update Without Using PC Dialog Unit When Replacing the ECS-UNI Disk	January 1997	DDC/MTU
11-MTU-97	RSE 09 12 96	MCS-5 MCU: Measures to be Taken When Replacing the Model PDX Industrial Personal Computer or Hard Drive	January 1997	DDC/MTU
10-MTU-97	SR 396-96	Electric Actuator - New Return Spring with Modified Attaching Eyes	January 1997	396
9-MTU-97	MR 13 11 96	Oil System (Lube Oil Heat Exchanger): Edge Type Filter Element with Metallic Sealing	January 1997	396
8-MTU-97	396-96/053619	Cooling Fan Cover Plate: 16V 396 TE44/TB44L	January 1997	396

7-MTU-97	RSM 15 02 92	KKK Turbochargers: Modified Compressor Wheel-to-Shaft Securing Nut Tightening Torque	January 1997	General Information
6-MTU-97	RSM 01 09 92	Running Gear: Changed Tightening Torque for Connecting Rod Screws	January 1997	396
5-MTU-97	RSM 01 06 92	Running Gear: Changed Tightening Torque for Connecting Rod Screws	January 1997	396
4-MTU-97 Rev.	50392/2E 04 96	Maintenance Schedule: V396 TE 44 Engine Used in Tractors, Earthmoving Equipment, and Dump Haulers	January 1998	396
3-MTU-97	50392/2E 04 96	Maintenance Schedule: V396 TB 44L Engine Used in Tractors, Earthmoving Equipment, and Dump Haulers	January 1997	396
2-MTU-97	RSM 12 09 94	Crankshaft Assembly: Marking Engine Components During Assembly of New Engines	January 1997	General Information
1-MTU-97	RSM 12 10 92	ZR 110, 140, 170, 120 Turbocharger Overhaul: Checks and Balancing	January 1997	General Information

Table 4 MTU 1997 Service Bulletin Index

All the 1996 MTU service bulletins are listed in Table 5.

Bulletin Number	Reference Number	Bulletin Title	Date	File
18-MTU-96	—	Vickers V10 Hydraulic Pump Used with MTU 8V and 12V 183 Engines	October 1996	183

17-MTU-96	396-96/0530	Edge-Type Filter Element for Heat Exchanger Modernization Kit No. 869 586 0361	October 1996	396
16-MTU-96 (Revised) **Obsolete. Replaced by 1–MTU-00**.	RSM 96TS-29	Approved Lube Oil and Coolant for MTU Engines Used in North America	January 1997	DDC/MTU
15-MTU-96	183-96/0062	Coolant Thermostat Housing: Thermostat with 60 Degree Opening Temperature	October 1996	183
14-MTU-96	183-96/0060	Additional Retaining for Fuel, Coolant, and Air Pipework	October 1996	183
13-MTU-96	RSM 28 02 96	Instructions: Lifting Eyes Used for Engines with Flange-Mounted Gearbox	April 1996	183
12-MTU-96	RSM 26 02 96	Modification/Replacement of Generator Belt Tensioner/Bracket & Overheat Damage	April 1996	183
11-MTU-96	RSM 05 02 96	Expansion of Monitoring Against Engine Overheating Due to Failure of V-Belt Drive	April 1996	183
10-MTU-96	RSM 01 09 95	Replacement of Raw Water Pump Plugs with Sea Water Version	April 1996	183
9-MTU-96	RSM 06 06 95	Monitoring Equipment: Indication of Coolant Temperature	April 1996	183
8-MTU-96	RSM 20 03 95	Foaming in Coolant Distributor Housing: Compact Intercooler w/o Addl. Exp. Tank	April 1996	183
7-MTU-96	RSM 30 01 96	Accessories: Generator Drive Coupling Failure on 16V396-04	April 1996	396

6-MTU-96	RSM 21 02 96	Lube Oil System: Increased Oil Level on 16V396 TE Mine Haul Engines	April 1996	396
5-MTU-96	RSM 30 01 96	Accessories: Generator Drive Coupling Failure-16V 396-04 Dump Truck Engines	March 1996	396
4-MTU-96	RSM 24 01 96	ECS UnI Control System: Fault Code Display and Identification - 16V396 Dump Truck Engine	March 1996	396
3-MTU-96	RSM 11 08 95	Injector Nozzle Holder-Buzz Check	March 1996	396
2-MTU-96	RSM 09 08 95	Replacement of Anti-Friction Bearings in V-Belt Driven Generators	March 1996	396
1-MTU-96	RSM 20 02 95	Preservation of Engines Before Extended Out-of-Service Periods	March 1996	General Information

Table 5 MTU 1996 Service Bulletin Index

All the 1995 MTU service bulletins are listed in Table 6.

Bulletin Number	Reference Number	Bulletin Title	Date	File
6-MTU-95	RSM 06 12 94	Cleaning Cooling Chambers in Piston Crown Composite Pistons, 555 030 90 17	September 1995	396
5-MTU-95	MR 13 01 95	Tightness Check: M10 X 35 SB-AH Screw of Main PTO-End Insert in Exhaust System	September 1995	183
4-MTU-95	RSM 19 12 94	Modified Gaskets at End of Liquid Cooled Exhaust Line	September 1995	183
3-MTU-95	MR 20 09 94	Safety Precautions when Fabricating, Altering, Removing, or Disposing of Gaskets	September 1995	General Information
2-MTU-95	RSM 05 02 95	Oil System: Deletion/Removal of Turbo Air Inlet Housing Oil Return Lines	September 1995	396
1-MTU-95	Special	Maintenance Procedures for Stored Engines	September 1995	DDC/MTU

Table 6 MTU 1995 Service Bulletin Index

DETROIT DIESEL

mtu® Service Bulletin

NUMBER: 1–MTU–00 **REF NO.:** A001061/23E **FILE:** DDC/MTU **ENGINE:** All **DATE:** September 2000

Fluids and Lubricants Specifications for MTU-Manufactured Diesel Engines

Introduction

MTU has released an updated listing of the approved fluids and lubricating oils for MTU-manufactured diesel engines.

Details and Reason

MTU recently released updated brochure, “Fluids and Lubricants Specification,” publication number A001061/23E, dated 2000. The information in this brochure applies to all MTU-manufactured diesel engines, including Series 2000™ and Series 4000™ engines built in Germany. Because of the relevance of this information, the complete text of the brochure is included in this bulletin.

NOTE:
When selecting fluids and lubricants for MTU-manufactured engines, only the information listed in this service bulletin or in current brochure A001061/23E should be used.

NOTE:
Effective with the release of this service bulletin, the information in service bulletin 16-MTU-96 Rev. is no longer current. Remove and discard bulletin 16-MTU-96 Rev. from your bulletin manual.

DETROIT DIESEL

DDC/MTU *Series 2000*™ Service Information

NUMBER: 4–**2000**–99 Rev. **S.M. REF.:** C041.05.11 **ENGINE:** 2000 **DATE:** January 2000

REVISION: Revision bar indicates change. Please discard bulletin 4–2000–99 dated December 1999.

SUBJECT: CYLINDER HEAD MOUNTING BOLT TORQUE SEQUENCE

INTRODUCTION

The cylinder head installation steps in section C04.05.11 of the *Series 2000 Service Manual* were inadvertently listed out of sequence. The torque/turn procedure currently shown in the manual is in error and must not be used when installing cylinder heads.

DETAILS AND REASON

Detroit Diesel has found that the cylinder head installation steps in section C04.05.11 of the *Series 2000 Service Manual* were inadvertently listed out of sequence. The torque/turn procedure currently shown in the manual is in error and must not be used when installing cylinder heads. Effective immediately, the following procedure *must* be used to install Series 2000 cylinder heads:

1. Refer to service manual section C041.05.11 titled, “Installation of the Cylinder Head,” and perform all steps through step 5.

2. After coating bolt threads and screw head supports with clean lubricating oil, mount the cylinder head and new gasket onto the cylinder block guide pins and secure with the four (4) mounting bolts. See Figure 1.

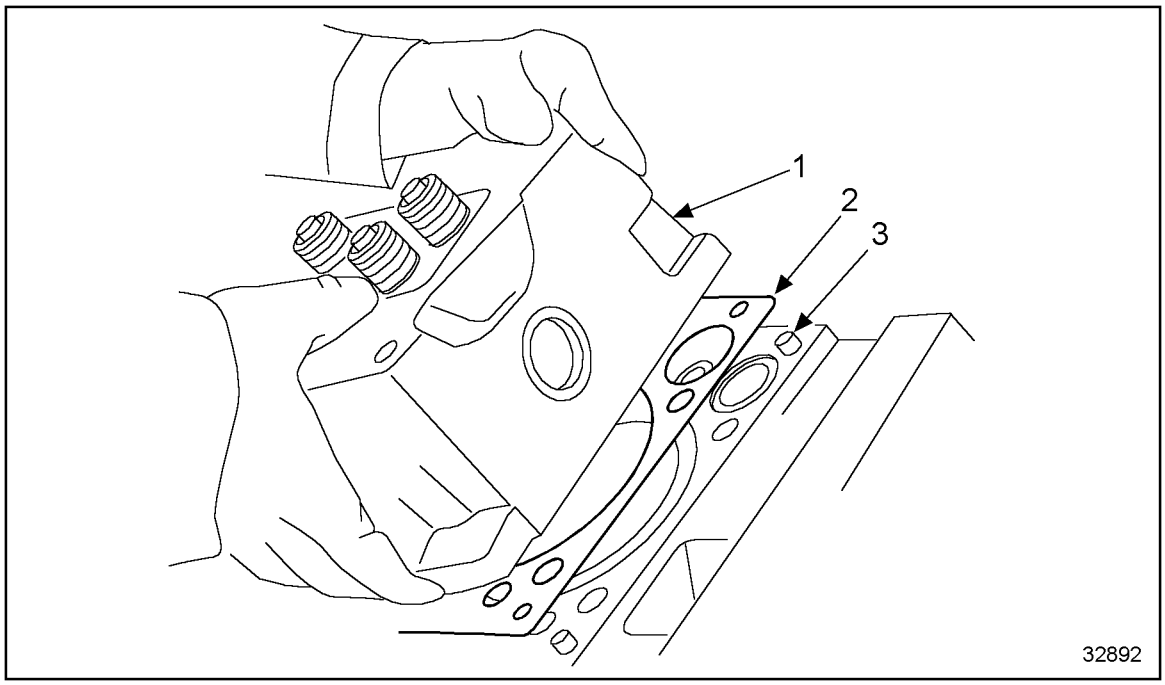

1. Cylinder Head
2. Gasket
3. Guide Pin

Figure 1 Installation of Cylinder Head

NOTICE:
Bolts *must* be torqued in stages using the criss-cross pattern shown. Failure to use the required torquing pattern and torque-turn values provided may result in incorrect head installation, which could lead to bolt loosening, loss of coolant and severe engine damage.

3. For proper bolt torquing sequence, see Figure 2 .

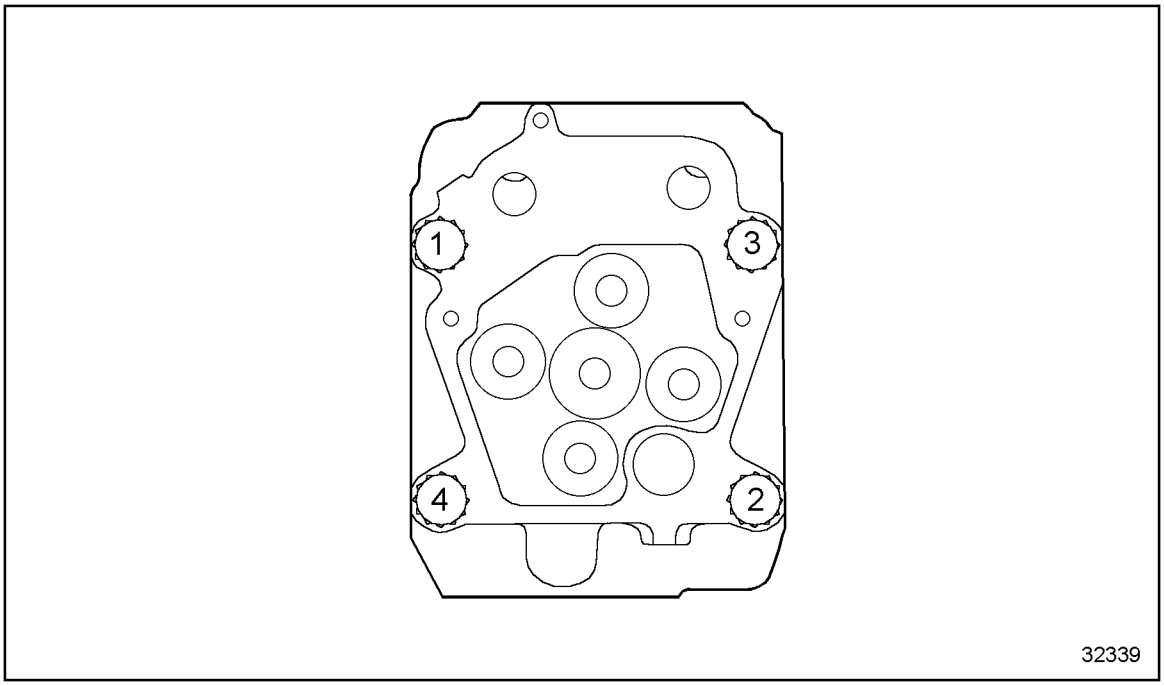

Figure 2 Cylinder Head Bolt Tightening Sequence

4. Beginning with the first stage and alternating from corner to opposite corner, torque all four (4) mounting bolts to the values listed in Table 1. Then move on to the next stage in sequence until stage 4 is completed and all bolts are torqued to 200 N·m (148 lb-ft).

Pattern	Torque Value
1st Stage	10 N·m (7 lb-ft)
2nd Stage	50 N·m (37 lb-ft)
3rd Stage	100 N·m (74 lb-ft)
4th Stage	200 N·m (148 lb-ft)
5th Stage	Turn bolts 90° *
6th Stage	Turn bolts 90°*

* An additional 10 degrees of turn is allowed, but not required.

Table 1 Cylinder Head Bolt Torque Patterns

5. Turn each bolt 90 degrees using the criss-cross pattern. See Figure 2 .

NOTE:
An additional 10 degrees of turn is allowed, but not required.

6. Turn each bolt an additional 90 degrees using the criss-cross pattern. See Figure 2 .

NOTE:
An additional 10 degrees of turn is allowed, but not required.

7. Repeat steps 1 through 6 for the remaining cylinder heads.

ADDITIONAL SERVICE INFORMATION

Additional service information is available in the Detroit Diesel *Series 2000 Service Manual*, publication number 6SE2000. The next revision to this manual will include the revised information. As a convenience to holders of the *Series 2000 Service Manual*, information in service manual format is attached. The page(s) may be inserted into the manual.

NOTE:
Manual insert pages are numbered for insertion into the current *Series 2000 Service Manual* dated August 1999. Service manuals are available from authorized Detroit Diesel distributors. If this bulletin was obtained from the Internet, service manual page(s) are available by returning to the screen “SIB Index”, selecting attachment pages, printing the page(s).

DETROIT DIESEL CORPORATION

13400 Outer Drive, West / Detroit, Michigan 48239-4001
Telephone: 313-592-5000
www.detroitdiesel.com

Detroit Diesel®, DDC® and the spinning arrows design are registered trademarks of Detroit Diesel Corporation. Series 2000™ is a trademark of Detroit Diesel Corporation.
© Copyright 2000 Detroit Diesel Corporation. All rights reserved. Printed in U.S.A.

DETROIT DIESEL

DDC/MTU *Series 2000*™ Service Information

NUMBER: 4–**2000**–99 **S.M. REF.:** C041.05.11 **ENGINE:** 2000 **DATE:** December 1999

SUBJECT: CYLINDER HEAD MOUNTING BOLT TORQUE SEQUENCE

INTRODUCTION

The cylinder head installation steps in section C04.05.11 of the *Series 2000 Service Manual* were inadvertently listed out of sequence. The torque/turn procedure currently shown in the manual is in error and must not be used when installing cylinder heads.

DETAILS AND REASON

Detroit Diesel has found that the cylinder head installation steps in section C04.05.11 of the *Series 2000 Service Manual* were inadvertently listed out of sequence. The torque/turn procedure currently shown in the manual is in error and must not be used when installing cylinder heads. Effective immediately, the following procedure *must* be used to install Series 2000 cylinder heads:

1. Refer to service manual section C041.05.11 titled, “Installation of the Cylinder Head,” and perform all steps through step 5.

2. After coating bolt threads and screw head supports with clean lubricating oil, mount the cylinder head and new gasket onto the cylinder block guide pins and secure with the four (4) mounting bolts. See Figure 1.

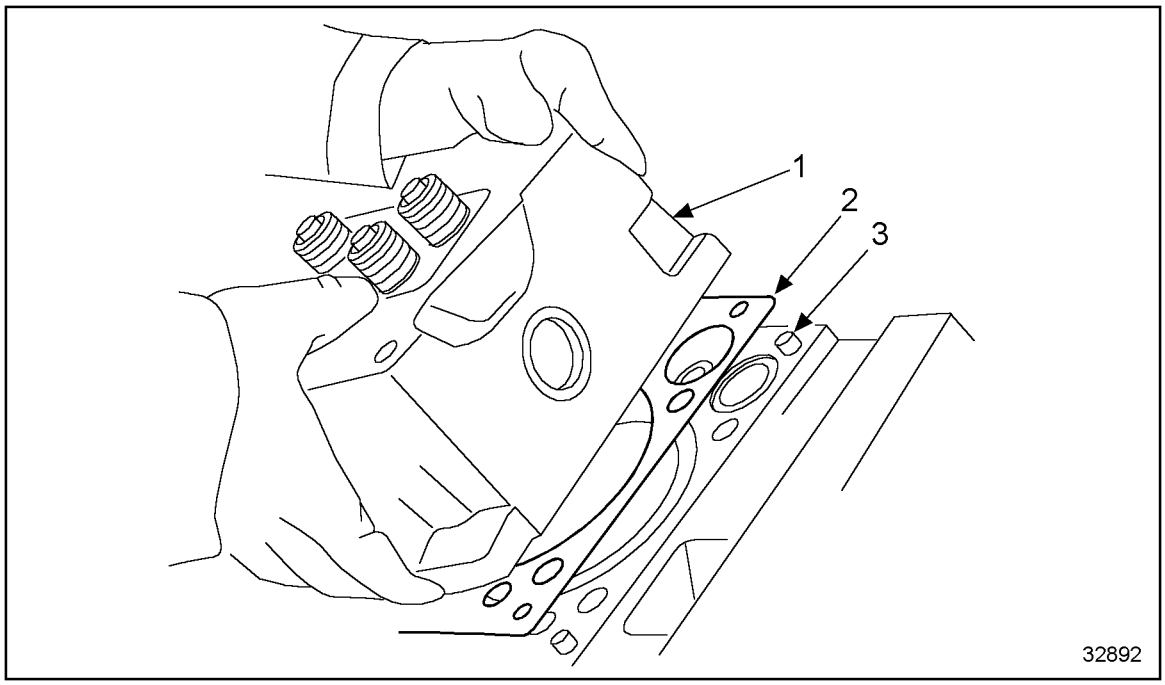

1. Cylinder Head
2. Gasket
3. Guide Pin

Figure 1 Installation of Cylinder Head

NOTICE:
Bolts *must* be torqued in stages using the criss-cross pattern shown. Failure to use the required torquing pattern and torque-turn values provided may result in incorrect head installation, which could lead to bolt loosening, loss of coolant and severe engine damage.

3. For proper bolt torquing sequence, see Figure 2 .

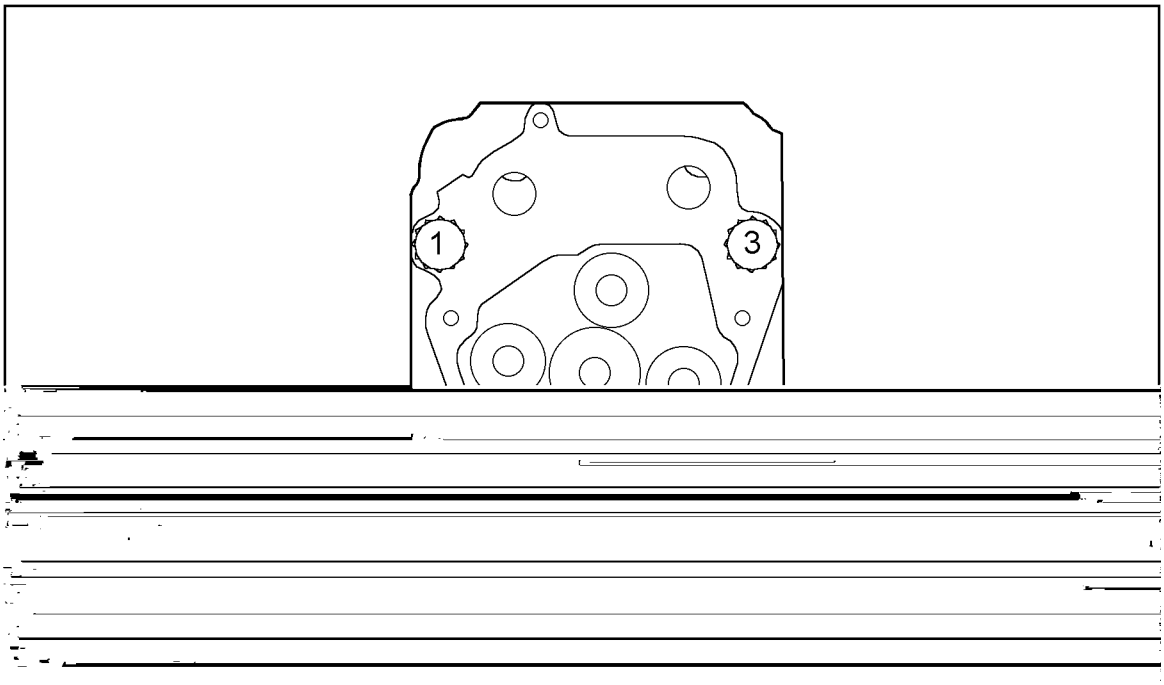

Figure 2 Cylinder Head Bolt Tightening Sequence

4. Beginning with the first stage and alternating from corner to opposite corner, torque all four mounting (4) bolts to the values listed in Table 1. Then move on to the next stage in sequence until stage 4 is completed and all bolts are torqued to 200 N·m (148 lb-ft).

Pattern	Torque Value
1st Stage	10 N·m (7 lb-ft)
2nd Stage	50 N·m (37 lb-ft)
3rd Stage	100 N·m (74 lb-ft)
4th Stage	200 N·m (148 lb-ft)
5th Stage	Turn bolts 90 degrees*
6th Stage	Turn bolts 90 degrees*

* An additional 10 degrees of turn is allowed, but not required.

Table 1 Cylinder Head Bolt Torque Patterns

5. Turn each bolt 90 degrees using the criss–cross pattern. See Figure 2.

NOTE:
An additional 10 degrees of turn is allowed, but not required.

2.7 AIR

Use proper shielding to protect everyone in the work area.

CAUTION:

To avoid injury from flying debris when using compressed air, wear adequate eye protection (face shield or safety goggles) and do not exceed 40 psi (276 kPa) air pressure.

2.8 FLUIDS AND PRESSURE

Be extremely careful when dealing with fluids under pressure.

CAUTION:

To avoid injury from the expulsion of hot coolant, never remove the cooling system pressure cap while the engine is at operating temperature. Remove the cap slowly to relieve pressure. Wear adequate protective clothing (face shield or safety goggles, rubber gloves, apron, and boots).

Fluids under pressure can have enough force to penetrate the skin.

CAUTION:

To avoid injury from penetrating fluids, do not put your hands in front of fluid under pressure. Fluids under pressure can penetrate skin and clothing.

These fluids can infect a minor cut or opening in the skin. See a doctor at once, if injured by escaping fluid. Seriuos infection or reaction can result without immediate medical treatment.

All information subject to change without notice.
7SA2000 0103 Copyright © 2001 DETROIT DIESEL CORPORATION

2.9 BATTERIES

Electrical storage batteries give off highly flammable hydrogen gas when charging and continue to do so for some time after receiving a steady charge.

CAUTION:

To avoid injury from battery explosion or contact with battery acid, work in a well-ventilated area, wear protective clothing, and avoid sparks or flames near the battery. Always establish correct polarity before connecting cables to the battery or battery circuit. If you come in contact with battery acid:

- ☐ **Flush your skin with water.**
- ☐ **Apply baking soda or lime to help neutralize the acid.**
- ☐ **Flush your eyes with water.**
- ☐ **Get medical attention immediately.**

Always disconnect the battery cable before working on the Detroit Diesel Electronic Controls system.

2.10 FIRE

Keep a charged fire extinguisher within reach. Be sure you have the correct type of extinguisher for the situation. The correct fire extinguisher types for specific working environments are listed in Table 2-1.

Fire Extinguisher	Work Environment
Type A	Wood, Paper, Textile and Rubbish
Type B	Flammable Liquids
Type C	Electrical Equipment

Table 2-1 The Correct Type of Fire Extinguisher

 Copyright © 2001 DETROIT DIESEL CORPORATION

2.11 PAINT

NOTICE:
Do not apply paint to the ECM or EFC. The application of paint may affect the performance of the ECM and EFC.

Mask off the ECM and EFC, prior to applying any paint.

2.12 DIAGNOSTIC DATA READER

For mobile applications, the Diagnostic Data Reader (DDR) must be used by personnel other than the vehicle operator.

The vehicle operator must maintain control of the vehicle while an assistant performs the diagnostic evaluations.

2.13 FLUOROELASTOMER (VITON)

Fluoroelastomer (Viton) parts such as O-rings and seals are perfectly safe to handle under normal design conditions.

CAUTION:
To avoid injury from chemical burns, wear a face shield and neoprene or PVC gloves when handling fluoroelastomer O-rings or seals that have been degraded by excessive heat. Discard gloves after handling degraded fluoroelastomer parts.

A potential hazard may occur if these components are raised to a temperature above 600°F (316°C) (in a fire for example). Fluoroelastomer will decompose (indicated by charring or the appearance of a black, sticky mass) and produce hydrofluoric acid. This acid is extremely corrosive and, if touched by bare skin, may cause severe burns (the symptoms could be delayed for several hours).

All information subject to change without notice.
7SA2000 0103 Copyright © 2001 DETROIT DIESEL CORPORATION

3 ENGINE AND ACCESSORY IDENTIFICATION

The Series 2000 engines are four-stroke, water-cooled, direct injection diesel engines. Series 2000 engines are 2 liters per cylinder in 8V, 12V and 16V configuration. Series 2000 engines have two different cooling system configurations - Jacket Water Aftercooling (JWAC) and Separate Circuit Charge Cooling (SCCC). See Figure 3-1.

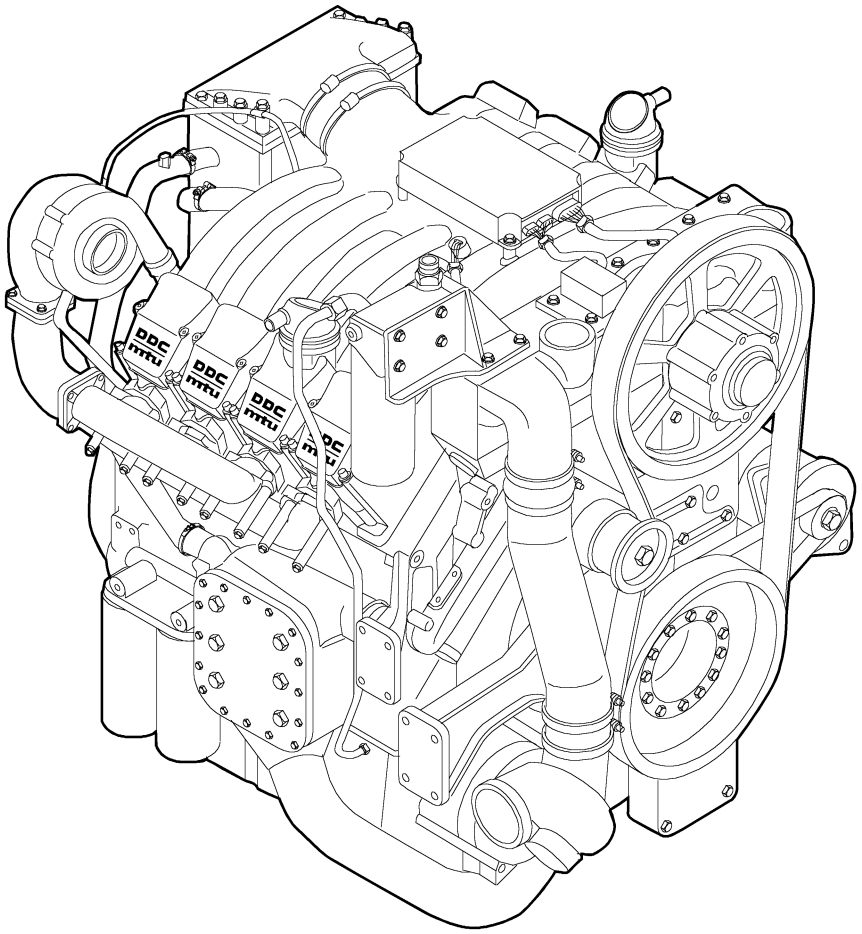

Figure 3-1 The Series 2000 Engine

 Copyright © 2001 DETROIT DIESEL CORPORATION

3.1 MAJOR COMPONENT LOCATIONS (FRONT VIEW)

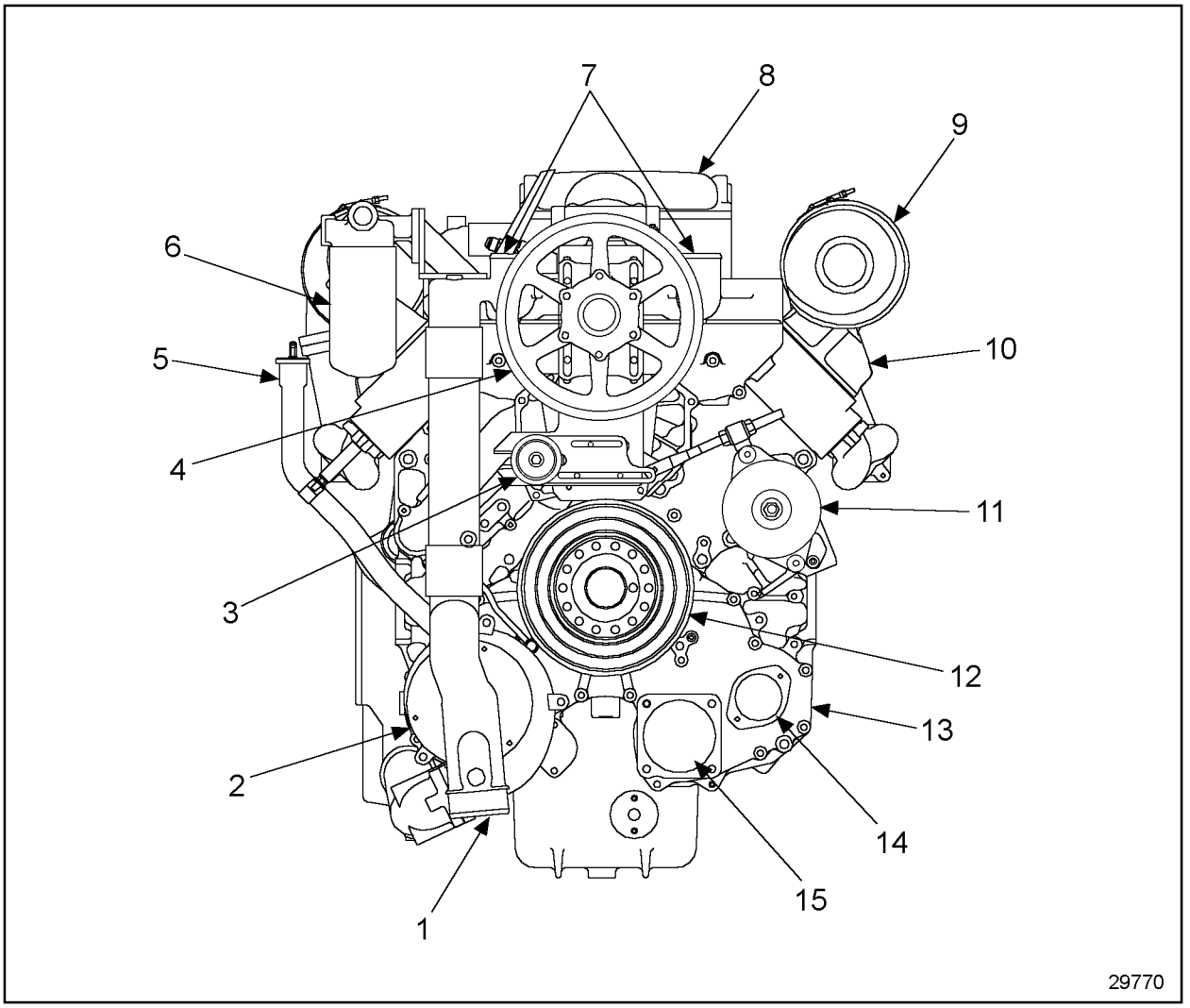

1. Water Inlet
2. Water Pump
3. Belt Tensioner
4. Fan Drive Pulley
5. Oil Fill
6. Fuel Filters
7. Water Outlet
8. Charge Air Cooler
9. Turbochargers (2)
10. Valve Cover
11. Alternator
12. Crankshaft Pulley
13. Front Cover
14. Accessory Drive (SAE A)
15. Accessory Drive (SAE C) (JWAC Only)

Figure 3-2 Front View, Series 2000 8V JWAC

All information subject to change without notice.
7SA2000 0103 Copyright © 2001 DETROIT DIESEL CORPORATION

3.2 MAJOR COMPONENT LOCATIONS (LEFT VIEW)

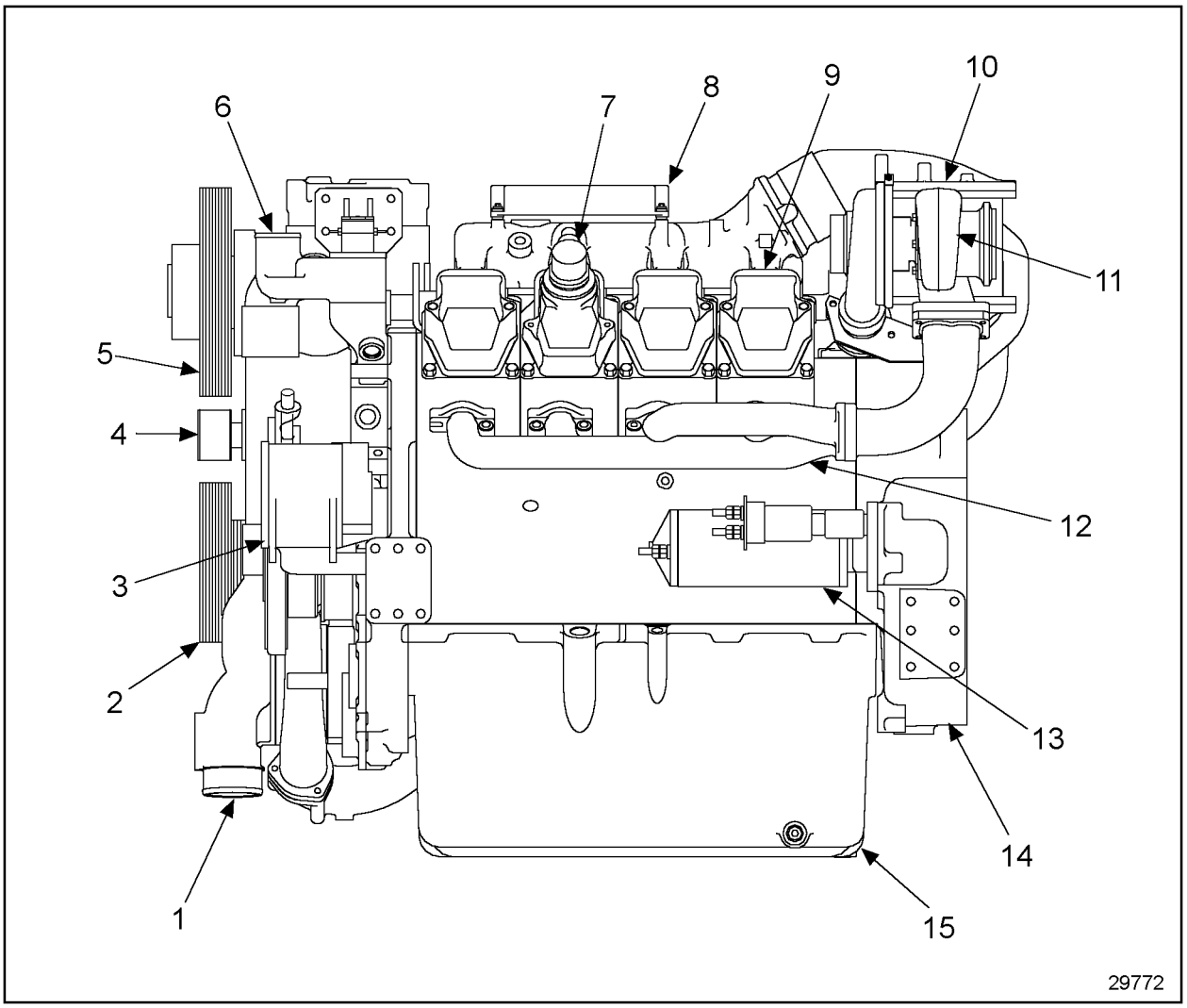

1. Water Inlet
2. Crankshaft Pulley
3. Alternator
4. Belt Tensioner
5. Fan Drive Pulley
6. Water Outlet
7. Breather
8. Electronic Control Module
9. Valve Cover
10. Charge Air Cooler
11. Turbocharger
12. Exhaust Manifold
13. Starter
14. Flywheel Housing
15. Oil Pan

Figure 3-3 Left Side, Series 2000 8V JWAC

 Copyright © 2001 DETROIT DIESEL CORPORATION

3.3 MAJOR COMPONENT LOCATIONS (RIGHT VIEW)

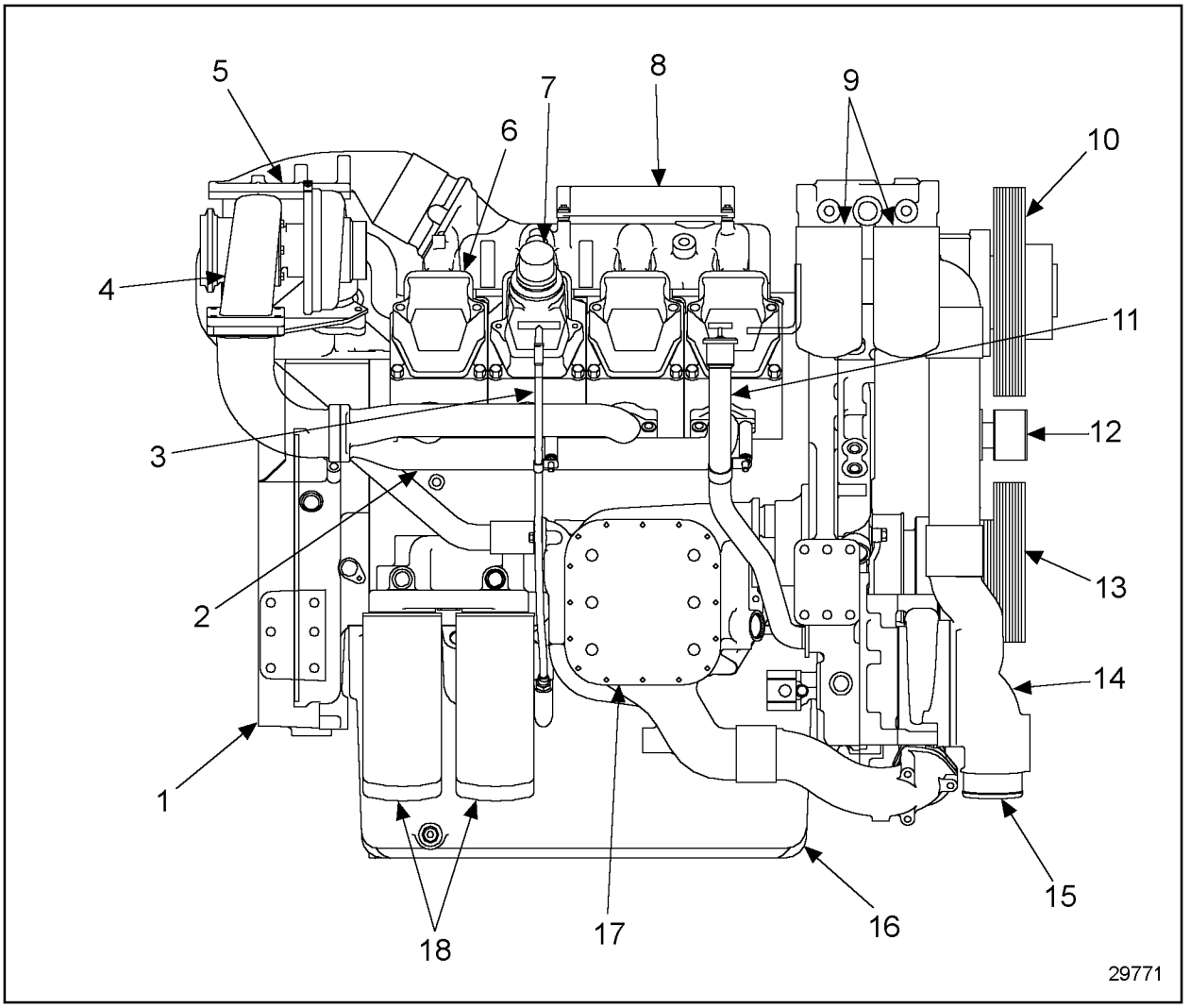

1. Flywheel Housing
2. Exhaust Manifold
3. Oil Level Gage
4. Turbocharger
5. Charge Air Cooler
6. Valve Cover
7. Breather
8. Electronic Control Module
9. Fuel Filters
10. Fan Drive Pulley
11. Oil Fill Tube
12. Belt Tensioner
13. Crankshaft Pulley
14. Water Pump
15. Water Inlet
16. Oil Pan
17. Oil Cooler
18. Oil Filters

Figure 3-4 Right Side, Series 2000 8V JWAC

All information subject to change without notice.
7SA2000 0103 Copyright © 2001 DETROIT DIESEL CORPORATION

3.4 MAJOR COMPONENT LOCATIONS (REAR VIEW)

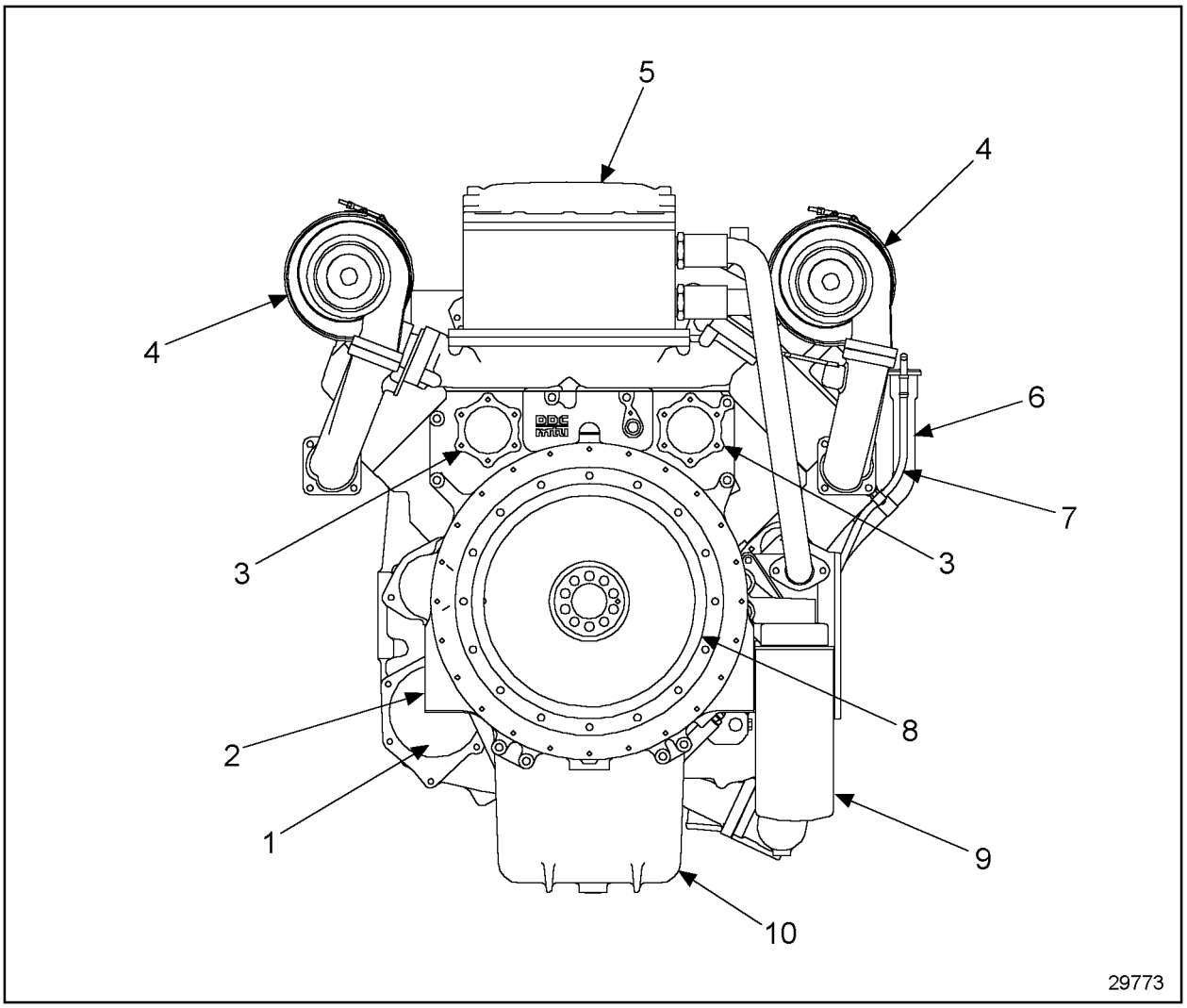

1. Air Compressor Drive Location
2. Flywheel Housing
3. Accessory Drives (2)
4. Turbochargers (2)
5. Charge Air Cooler
6. Oil Fill Tube
7. Oil Level Gage
8. Flywheel
9. Oil Filters
10. Oil Pan

Figure 3-5 Back View, Series 2000 8V JWAC

 Copyright © 2001 DETROIT DIESEL CORPORATION

3.5 ENGINE MODEL NUMBER DESIGNATION

The next figure shows the Detroit Diesel engine model numbering system (see Figure 3-6). The example is for a 12 cylinder, turbocharged Series 2000 engine.

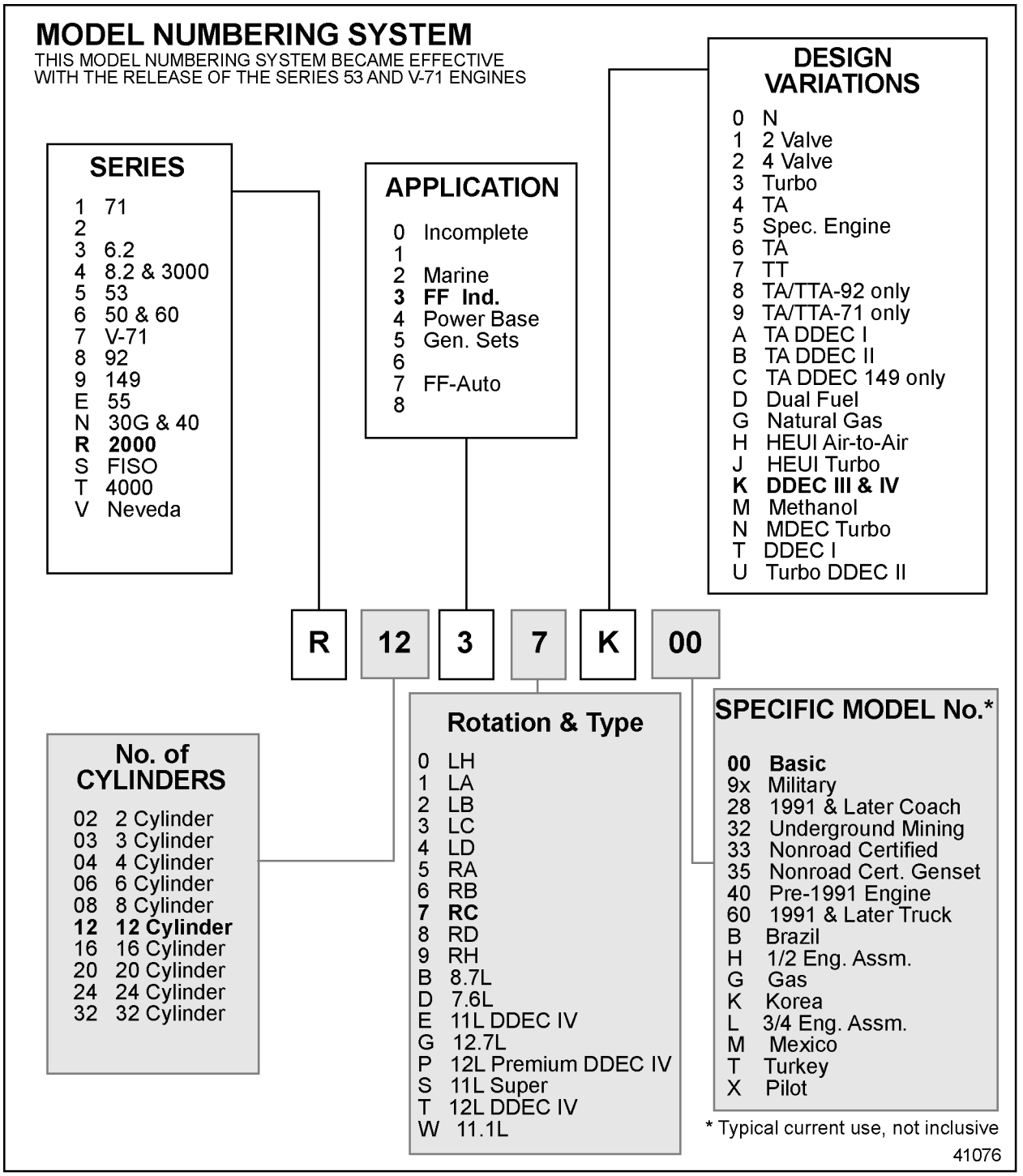

Figure 3-6 Detroit Diesel Engine Model Numbering System

All information subject to change without notice.
7SA2000 0103 Copyright © 2001 DETROIT DIESEL CORPORATION

3.6 CYLINDER LABELING

The Series 2000 cylinder labeling follows the ISO1204 nomenclature (see Figure 3-7). The viewpoint for cylinder labeling is from behind the main power take-off (PTO) end. The cylinder bank on the left is the A bank and the cylinder closest to the PTO is A1. The right cylinder bank is the B bank and the cylinder closest to the PTO is B1. See Figure 3-8 which details the traditional DDC labeling.

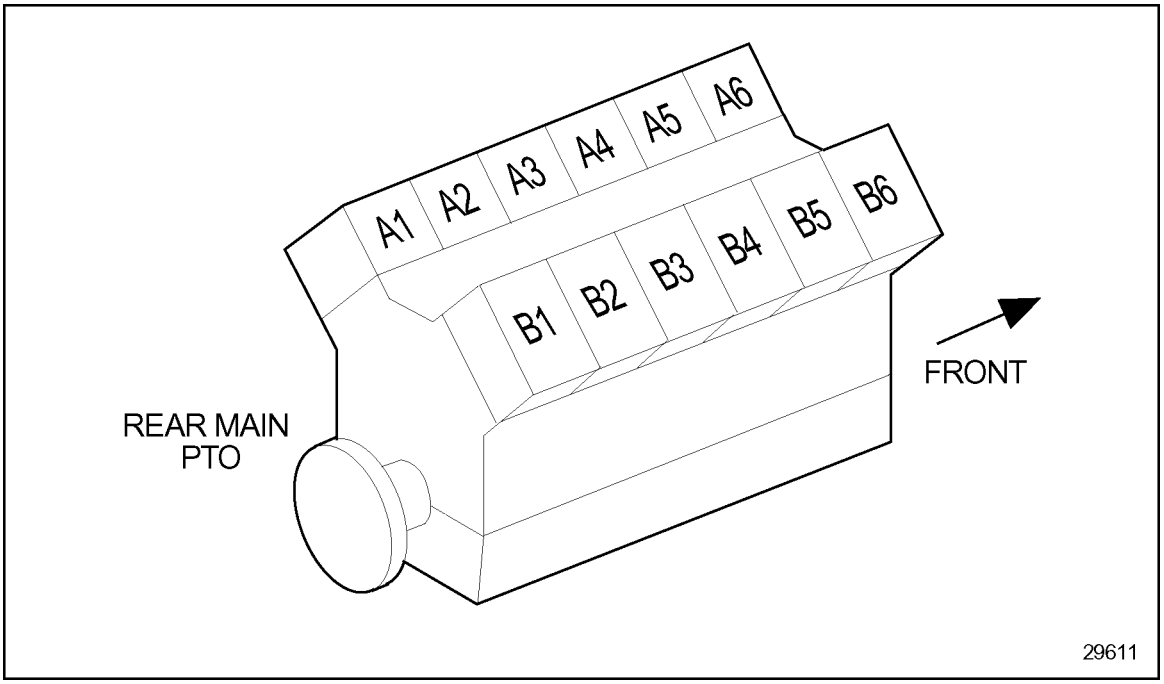

Figure 3-7 DDC/MTU Series 2000 Cylinder Naming (ISO1204)

 Copyright © 2001 DETROIT DIESEL CORPORATION

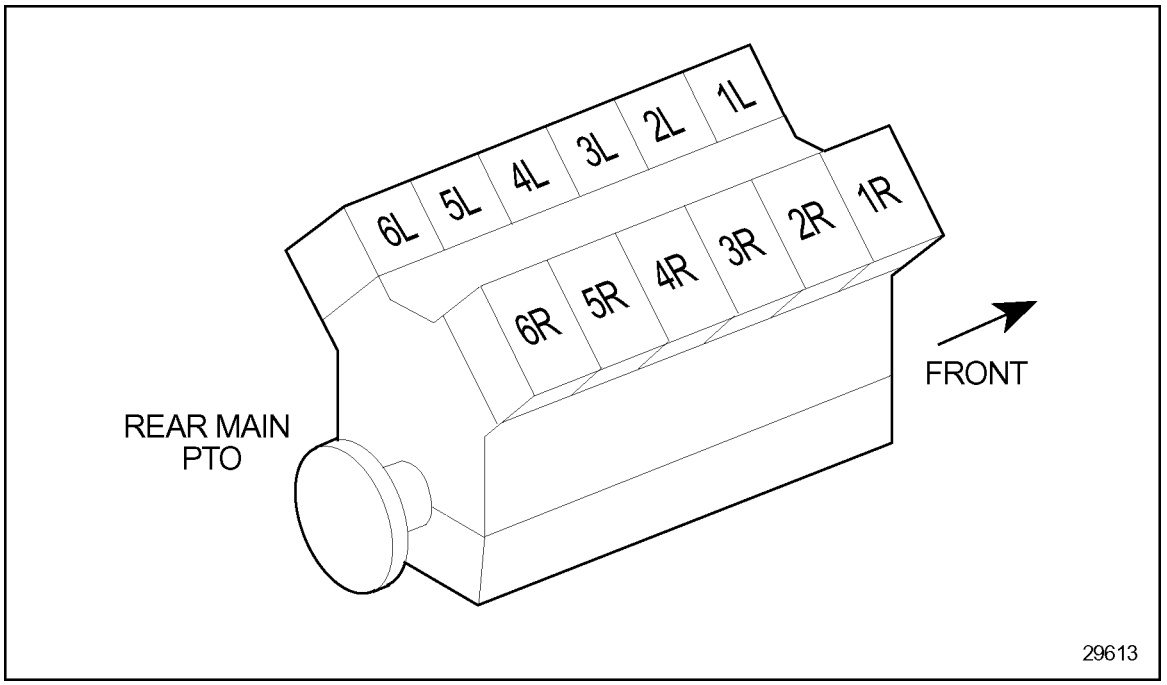

Figure 3-8 Traditional Detroit Diesel Cylinder Naming

As viewed from the rear of the engine, 1L is at front left and 1R is at front right. (1L = A6 and 6L = A1).

The traditional DDC labeling nomenclature is the default used by DDEC and by the Diagnostic Data Reader (DDR). The DDR can be configured to display ISO1204 cylinder labeling. ISO nomenclature is used in DDC literature about the Series 2000 engine.

All information subject to change without notice.
7SA2000 0103 Copyright © 2001 DETROIT DIESEL CORPORATION

4 AIR INLET SYSTEM

An internal combustion engine requires an adequate supply of air for combustion to develop full rated power and burn fuel efficiently. This section describes the function, installation, design, and test requirements for the air inlet system of a Series 2000 engine.

4.1 AIR INLET SYSTEM DESCRIPTION

The intake manifold routes the air charge into the cylinder head ports through two intake valves, and into the cylinder. Each cylinder is filled with clean, fresh air which provides for efficient combustion, at the beginning of the compression stroke. See Figure 4-1, Figure 4-2, and Figure 4-3.

All Series 2000 engines have multiple turbochargers and liquid charge cooling. The charge cooler is mounted near the rear of the engine and intake air is plumbed from the turbochargers through the charge air cooler into the intake manifold.

 Copyright © 2001 DETROIT DIESEL CORPORATION

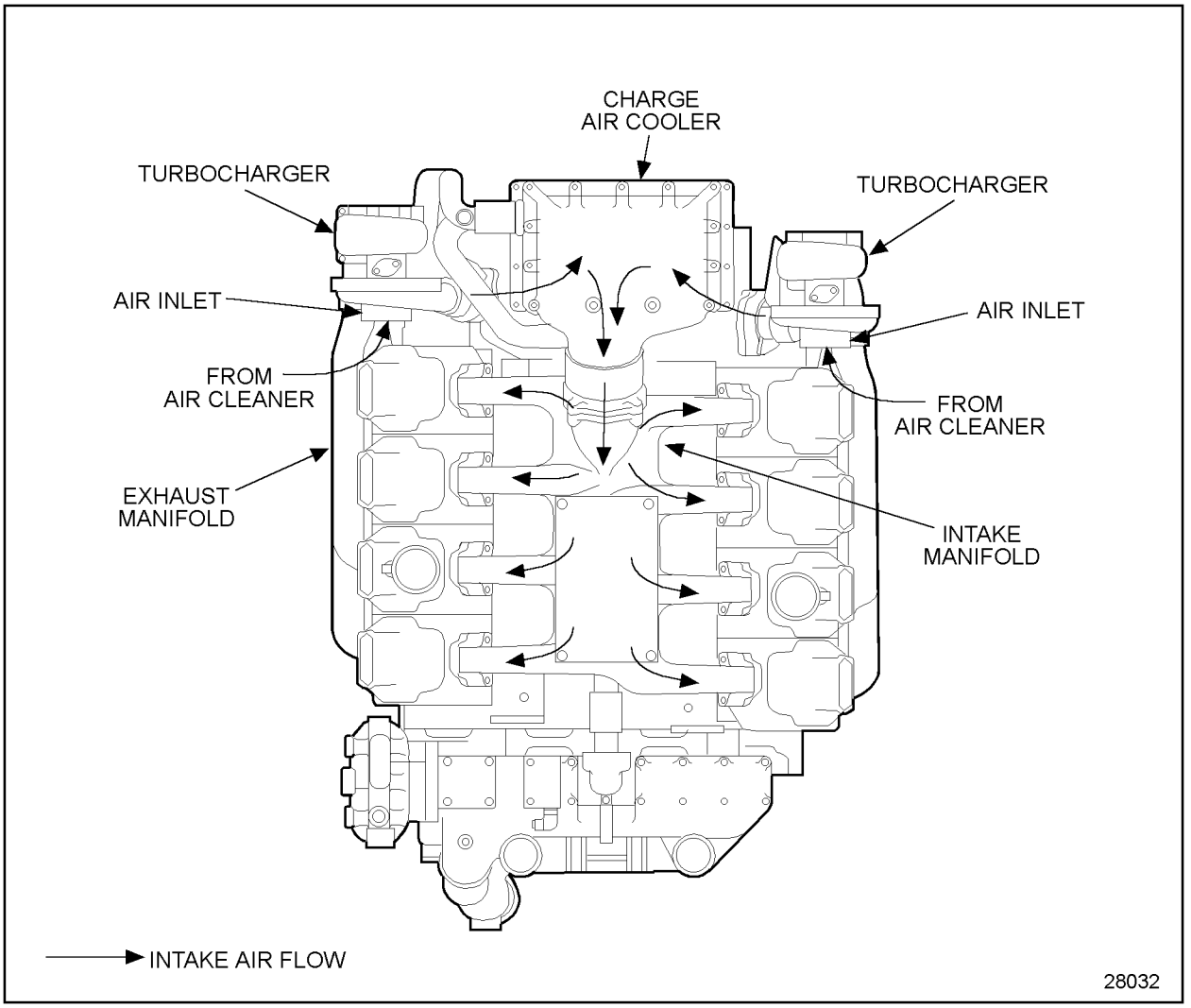

Figure 4-1 Series 2000 8V Air Intake System

All information subject to change without notice.
7SA2000 0103 Copyright © 2001 DETROIT DIESEL CORPORATION

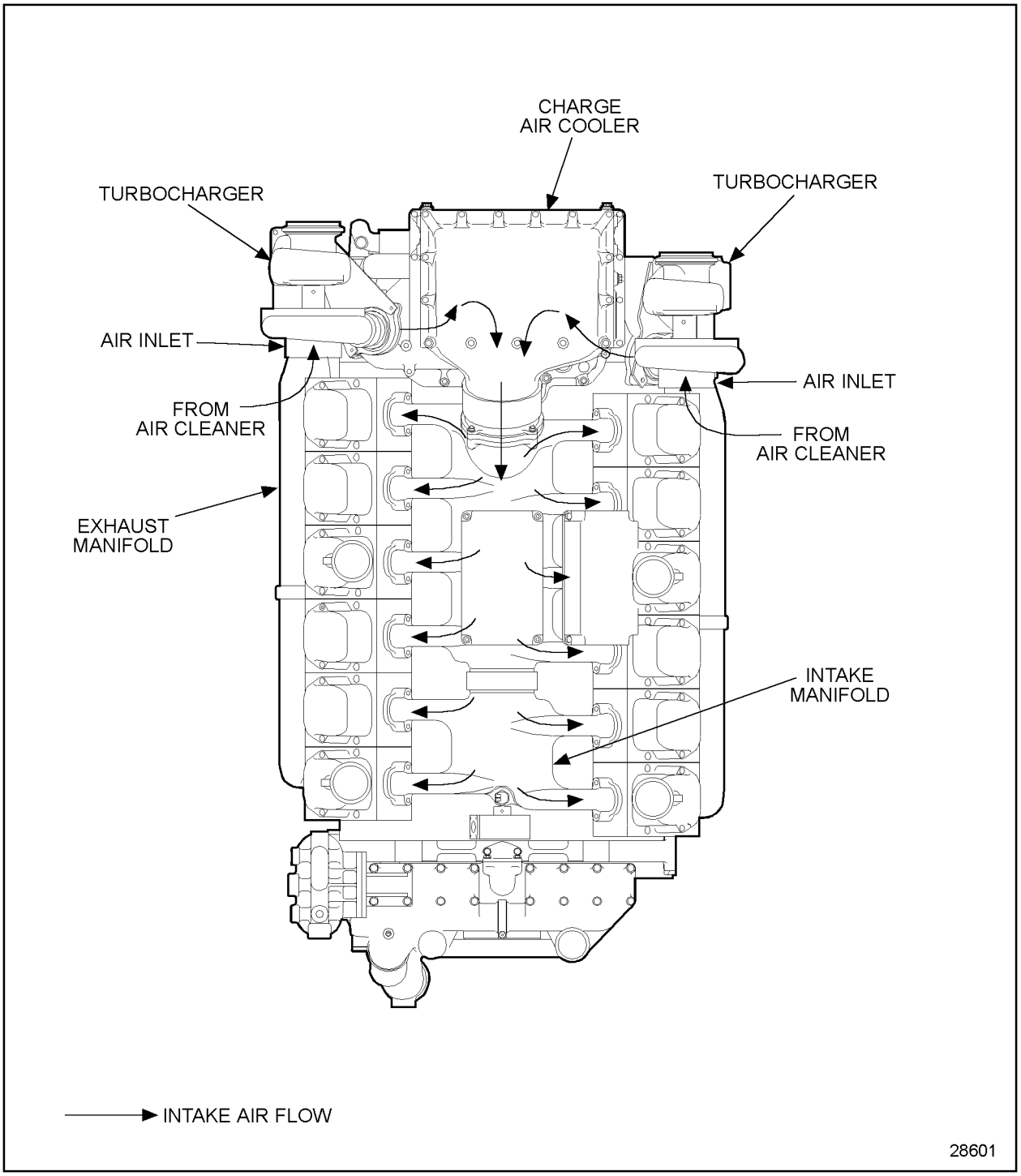

Figure 4-2 Series 2000 12V Air Intake System

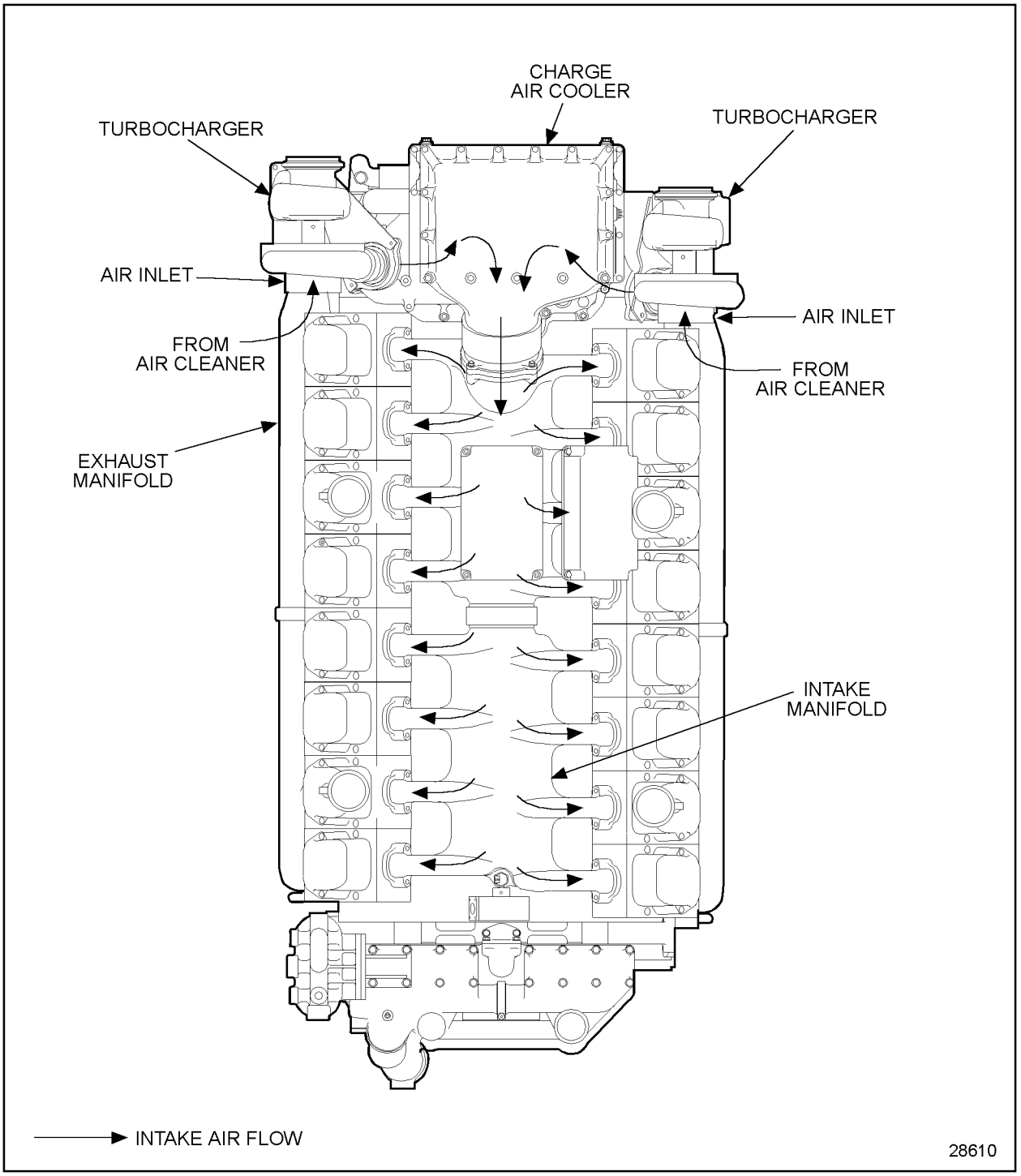

Figure 4-3 Series 2000 16V Air Intake System

All information subject to change without notice.
7SA2000 0103 Copyright © 2001 DETROIT DIESEL CORPORATION

4.2 INSTALLATION REQUIREMENTS

The air inlet system has a direct effect on engine output, fuel consumption, exhaust emissions, and engine life. The parts and materials must be designed to withstand the working environment that applies to the system.

4.2.1 DRY PAPER ELEMENT AIR CLEANERS

Dry paper element type cleaners are recommended for use on Series 2000 engines. Alternate types of air filtration systems, such foam type and oil bath cleaners, may be available in the aftermarket.

Dry paper element air cleaners are classified by function:

- ☐ Light-duty air cleaners (not applicable to Series 2000 industrial applications)
- ☐ Medium-duty air cleaners
- ☐ Heavy-duty air cleaners
- ☐ Extra heavy-duty air cleaners

The type of function relates to the dust holding capacity of the particular cleaner.

The choice of cleaner depends upon the engine type, application, operating environment, and service life. The different types of air cleaners and the typical application in which they are used are listed in Table 4-1.

Type of Air Cleaner	Typical Applications
Light-duty (not applicable to Series 2000 industrial applications)	Marine Engines, Mobile And Stationary Engines In Factories, Warehouses, Cranes, Wheel-mounted Applications
Medium-duty	Generator Sets, Air Compressors, Pumps Cranes, Wheel-mounted Applications
Heavy-duty	Trucks, Nonroad Applications, Logging Tractors, Agricultural Motor Graders, Tractors, Crawler, Small Scrapers, Cranes, Shovels
Extra Heavy-duty	Scrapers, Large Or Rear Engine Rock Drills, Self-contained Cranes And Shovels, Rough Terrain Air Compressors, Rock Drilling Or Quarrying Tractors, Full-tracked Applications, Low Speed Applications

Table 4-1 Air Cleaner Applications

The cleaner must meet filtration requirements across the engine speed and load range.

The cleaner must be readily accessible for maintenance with adequate space provision for replacement of the element.

Air cleaners may have replaceable elements, or may be completely disposable.

Tests to determine the service life of an air cleaner are usually performed in accordance with SAE J726-C.

 Copyright © 2001 DETROIT DIESEL CORPORATION

Medium-duty Use Air Cleaner

A medium-duty air cleaner is typically a two stage cyclonic/paper element cleaner. These cleaners have a cyclonic first stage that removes about 80-85% of the dust from the air before it passes through the paper element. Optional safety elements for increased reliability are available and may be included in these air cleaners. See Figure 4-4.

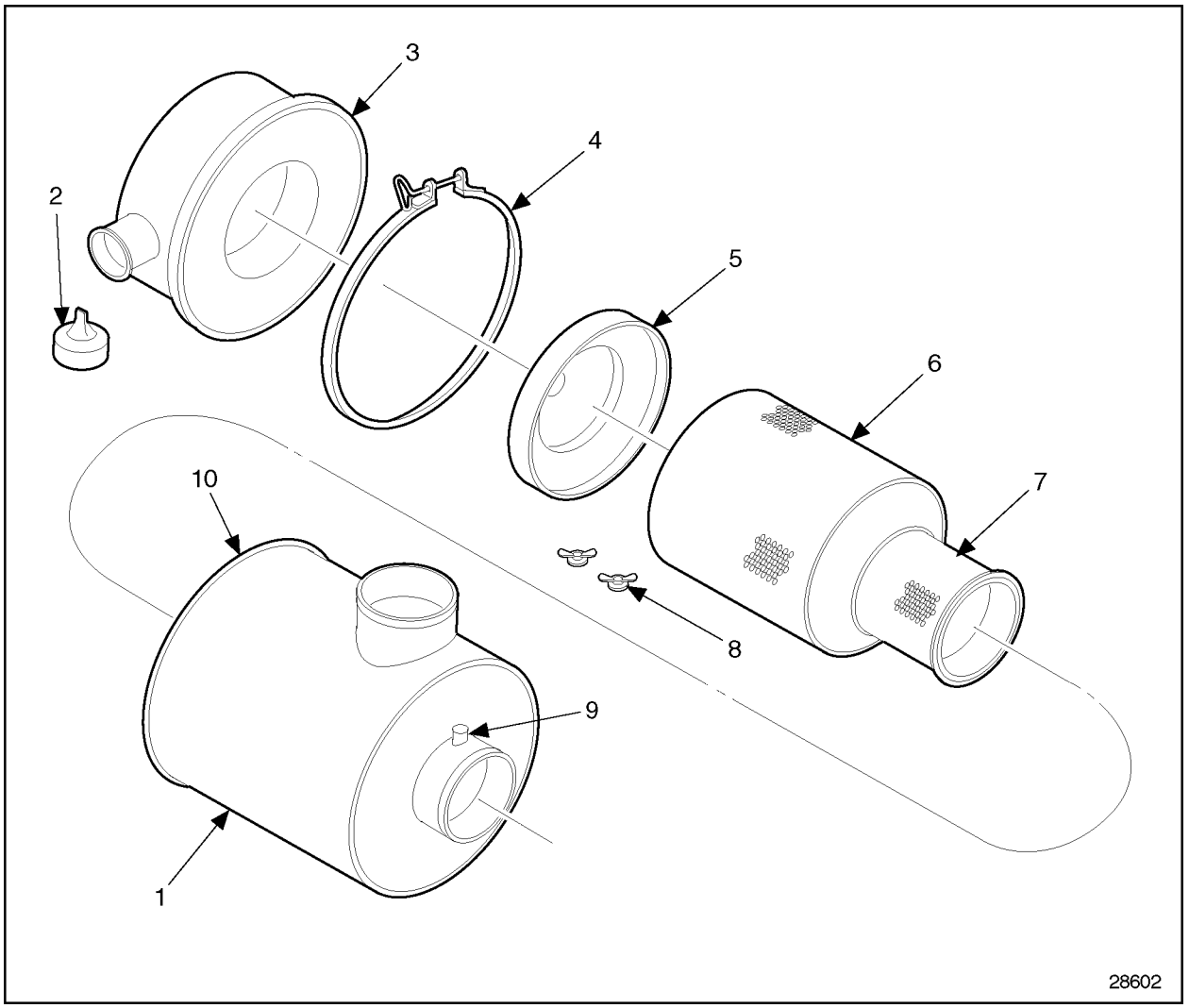

1. Body Assembly
2. Vacuator Valve
3. Cup Assembly
4. Clamp Assembly
5. Baffle Assembly
6. Primary Element
7. Safety Element
8. Nut Assembly (Wing Nut and Washer Gasket)
9. Restriction Indicator Fitting Cap
10. O-ring

Figure 4-4 Medium-duty Air Cleaner

All information subject to change without notice.
7SA2000 0103 Copyright © 2001 DETROIT DIESEL CORPORATION

Heavy-duty Use Air Cleaner

A heavy-duty air cleaner is typically a two stage cyclonic/paper element cleaner. These cleaners incorporate a highly efficient cyclonic pre-cleaner arrangement that removes 94-98% of the dust from the air before it passes through the paper element. Some types of heavy duty air cleaners do not include a mechanical precleaner but employ an oversized filter element to accomplish the same dust removal with similar service intervals. Optional safety elements for increased reliability are available and may be included in these air cleaners. See Figure 4-5.

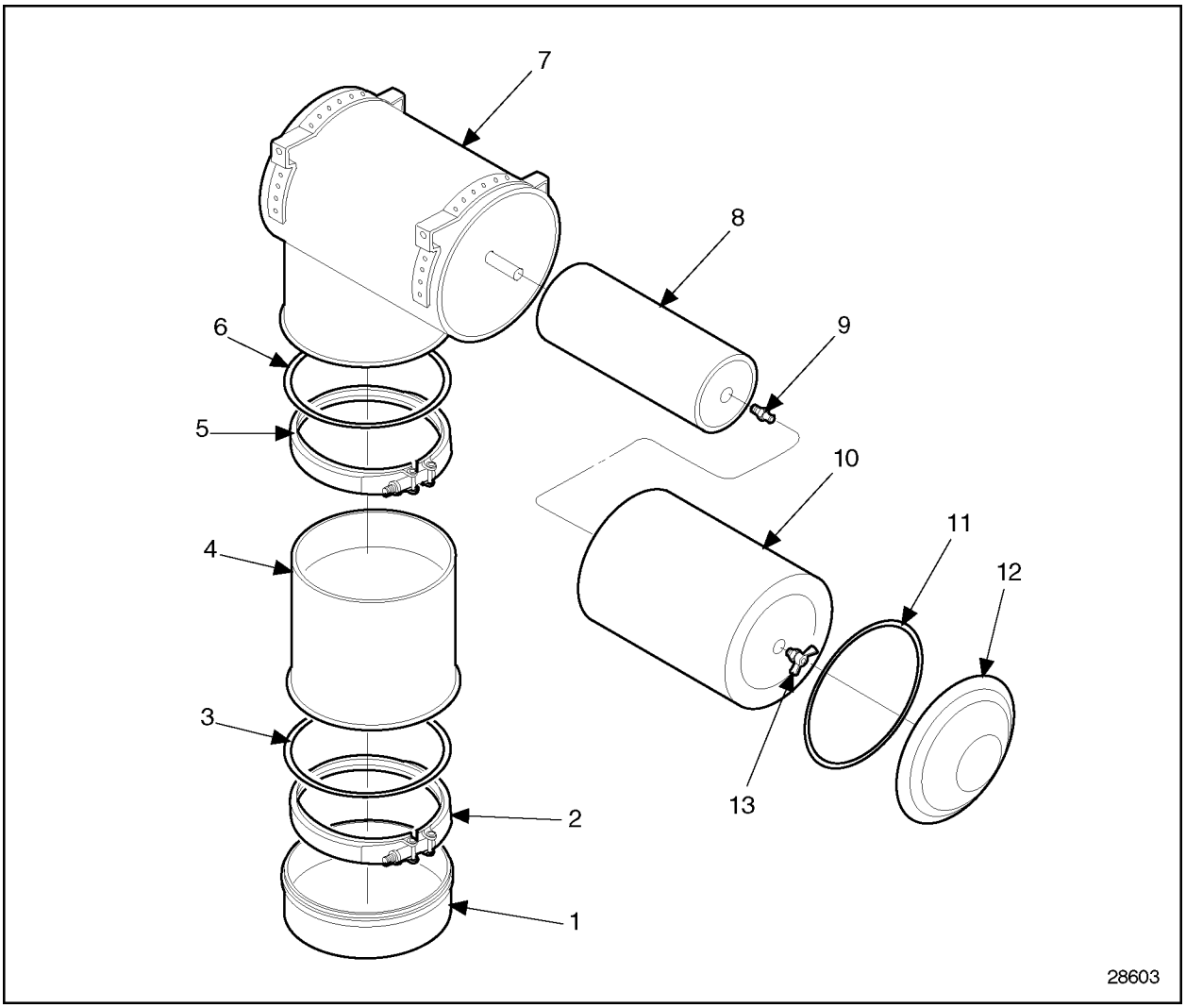

1. Dust Cup
2. Cup Clamp
3. Body or Cup O-ring
4. Lower Body Assembly
5. Body Clamp
6. O-ring
7. Upper Body Assembly
8. Safety Element
9. Safety Signal
10. Primary Element
11. Gasket
12. Access Cover
13. Wing Nut

Figure 4-5 Heavy-duty Air Cleaner

 Copyright © 2001 DETROIT DIESEL CORPORATION

Extra Heavy-duty Use

Extra heavy-duty air cleaners have large paper filters coupled with high efficiency mechanical precleaners. The dust from the precleaner section may be continually removed by the use of an exhaust aspirator, positive pressure bleed, or may have dust cups that open because of the weight of the dust when the engine stops. Optional safety elements for increased reliability are available and may be included in these air cleaners. See Figure 4-6.

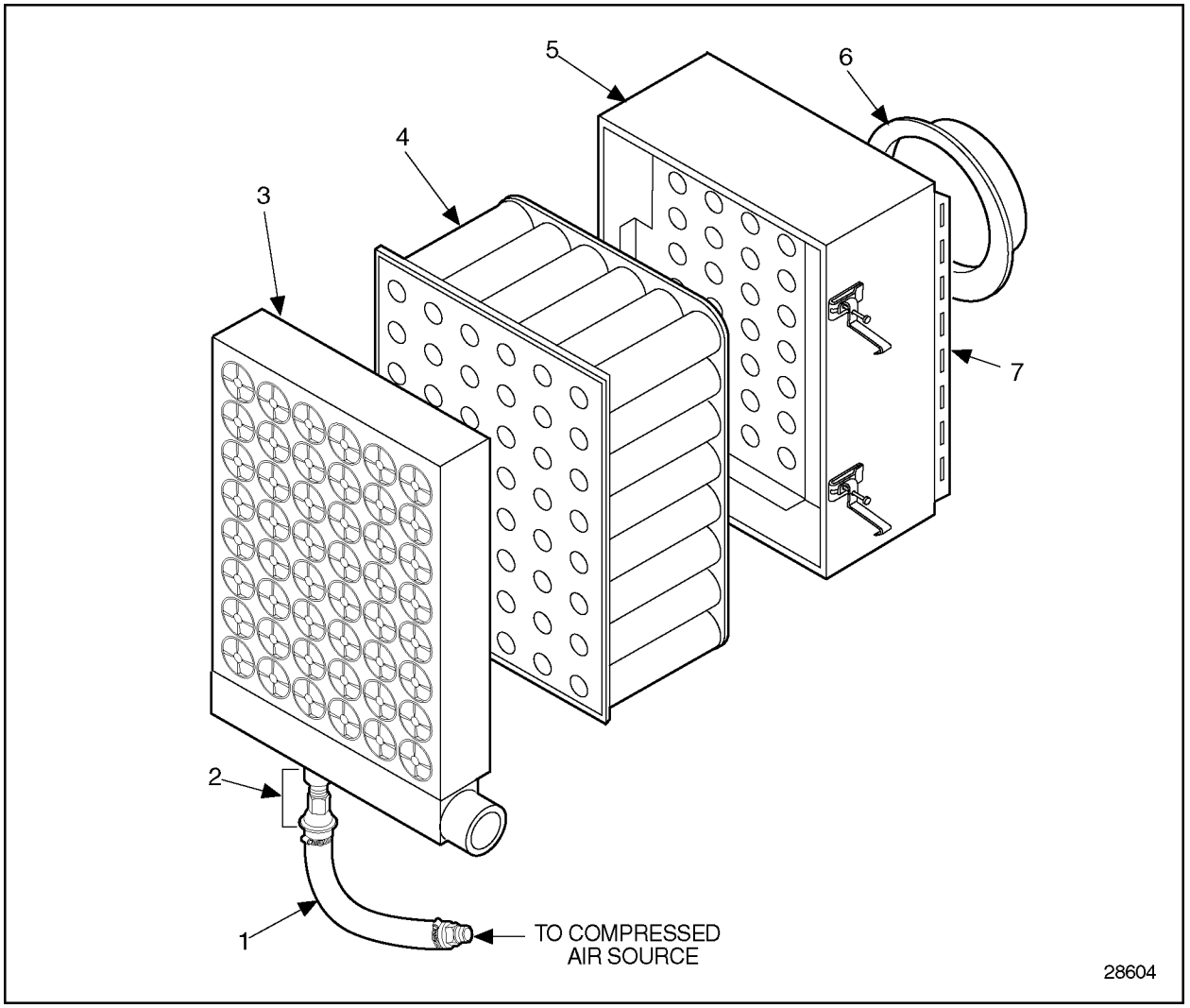

1. Bleed Tube
2. Positive Pressure Plumbing Kit
3. Positive Pressure Self-cleaning Precleaner
4. Pamic Element
5. Housing
6. Outlet Nozzle
7. Mounting Flange

Figure 4-6 Extra Heavy-duty Air Cleaner

NOTE:
Turbo air should not be used as the compressed air source shown in Figure 4-6.

All information subject to change without notice.
7SA2000 0103 Copyright © 2001 DETROIT DIESEL CORPORATION

Foam Type Air Cleaners

Foam type air cleaner elements, available in the aftermarket, may produce gummy or varnish-like deposits which may affect engine operation.

NOTICE:
DDC is aware of attempts to use air cleaner elements made of foam or fabric batting material soaked with a sticky substance to improve dirt-holding capability. This substance may transfer from the filter media and coat the inside surfaces of air ducts and engine air inlet systems. The result may be reduced engine performance and a change in engine operating conditions.

DDC does not recommend the use of foam type air cleaners.

Oil Bath Air Cleaners

Oil bath air cleaners generally have lower efficiencies and greater restriction to airflow than dry type air cleaners.

NOTE:
DDC does not recommend the use of an oil bath type air cleaners. Oil bath type air cleaners generally do not have enough gradability for mobile, nonroad applications.

NOTICE:
Oil pullover from improper usage or extreme vehicle tilt may cause engine runaway and damage. Air cleaner performance may be adversely affected by temperature extremes. The oil mist created by the filter may adversely affect turbocharger life and performance.

DDC recognizes that oil bath air cleaners may be necessary in locations where dry type air cleaners are not readily available. Therefore, oil bath type air cleaners are acceptable when used according to the air cleaner manufacturer's guidelines and DDC air system requirements.

Consult DDC Application Engineering if a wet-type air cleaner is needed.

 Copyright © 2001 DETROIT DIESEL CORPORATION

Auxiliary Precleaners

Auxiliary precleaners are devices that separate contaminants from the incoming air and expel them through a discharge port prior to entering the air cleaner inlet. Precleaners remove most of the airborne dirt from incoming air which extends the service life of the filter element. Precleaners force the incoming air to rotate within the precleaner creating a centrifugal force and depositing the dirt into a bin or cup for removal while servicing. See Figure 4-7.

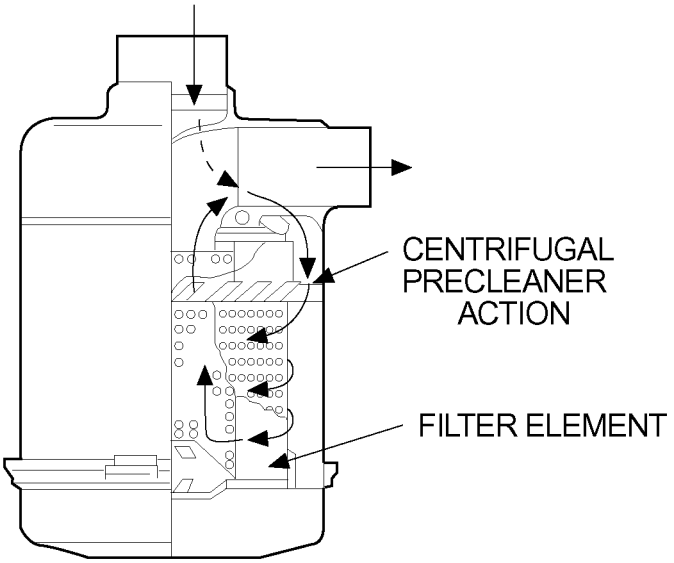

Figure 4-7 Precleaner Centrifugal Action

Precleaners may be used with the Series 2000 engine as long as the air inlet restriction requirements are met. The use of a precleaner may necessitate the use of a larger air cleaner.

Inlet Screens

An inlet screen may be used with an air cleaner when larger airborne material is encountered in an operating environment. An inlet screen will prevent this material from blocking air passage through the air cleaner elements. The inlet screen should be inspected frequently and cleaned as necessary.

All information subject to change without notice.
7SA2000 0103 Copyright © 2001 DETROIT DIESEL CORPORATION

Rain Caps and Inlet Hoods

The entrance to the air cleaner must be designed to ensure that no water or snow can enter the air cleaner. Rain caps or inlet hoods are used for this purpose (see Figure 4-8).

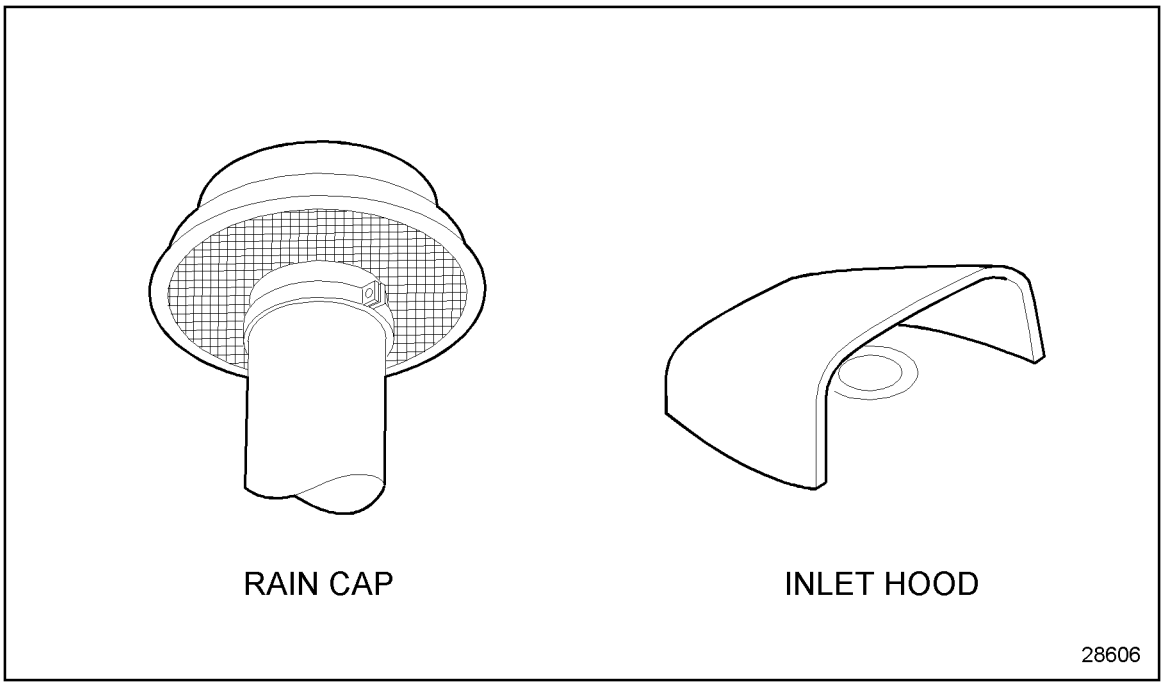

Figure 4-8 Rain Cap and Inlet Hood

Inlet Silencers

Appreciable reductions in noise levels can sometimes be achieved with the use of inlet silencers.

Inlet silencers operate on the same principle as exhaust silencers. The installer should consult the supplier for specific recommendations. Care should be taken to ensure that the intake restriction is not raised above the allowable limit for a clean air system.

Air Cleaner Selection

Choose an appropriate air cleaner as follows:

1. Determine the maximum engine air flow requirement and the clean and dirty restriction limitations from the engine performance curve.
2. Determine the general application category.
3. Determine the air cleaner classification.
4. Select the appropriate cleaner from the manufacturer’s recommendations.

 Copyright © 2001 DETROIT DIESEL CORPORATION

4.2.2 CLOSED CRANKCASE BREATHER SYSTEM

A closed crankcase breather system is an option for the Series 2000 engines.

Closed crankcase breather systems, which vent crankcase vapors back into the air inlet stream of the engine, are becoming increasingly popular for diesel engines. There is no current requirement for breather systems on turbocharged diesel engines in the United States, although this technology has been demonstrated for use in Europe.

4.2.3 RESTRICTION INDICATOR

Air inlet restriction is an important parameter of the air inlet system. High inlet restriction may cause insufficient air for combustion. Factors resulting in a high inlet restriction include:

- ☐ Small intake pipe diameter
- ☐ Excessive number of sharp bends in the system
- ☐ Long pipe between the air cleaner and turbocharger compressor inlet
- ☐ High air cleaner resistance

Air inlet restriction that is too high may result in:

- ☐ Reduced power
- ☐ Poor fuel economy
- ☐ High combustion temperature
- ☐ Over-heating
- ☐ Reduced engine life
- ☐ Excessive smoke

An air inlet restriction indicator must be fitted on the air intake system.

The operating setting of the indicator should correspond to the maximum permissible inlet restriction, 5.0 kPa (20 in. H_2O) maximum for systems with dirty filters, provided that it is connected to a tapping point close to the turbocharger inlet.

Altitude affects air inlet restriction. The Altitude Performance Curve (see Figure 4-9) illustrates the effects of altitude on the percentage of inlet restriction. An example of the reduction of allowable restriction at different altitudes is listed in Table 4-2.

Temperature	Altitude	Allowable Restriction			
		% Clean System	Clean System	% Dirty System	Dirty System
25°C (77°F)	At sea level	100%	3.0 kPa (12 in. H_2O)	100%	5.0 kPa (20 in. H_2O)
25°C (77°F)	2400m (8,000 ft) above sea level	78%	2.31 kPa (9.25 in. H_2O)	78%	3.85 kPa (15.5 in. H_2O)

Table 4-2 Air Inlet Restriction at Different Altitudes

The reason for this reduction in allowable restriction is the lower air density at altitude.

All information subject to change without notice.
7SA2000 0103 Copyright © 2001 DETROIT DIESEL CORPORATION

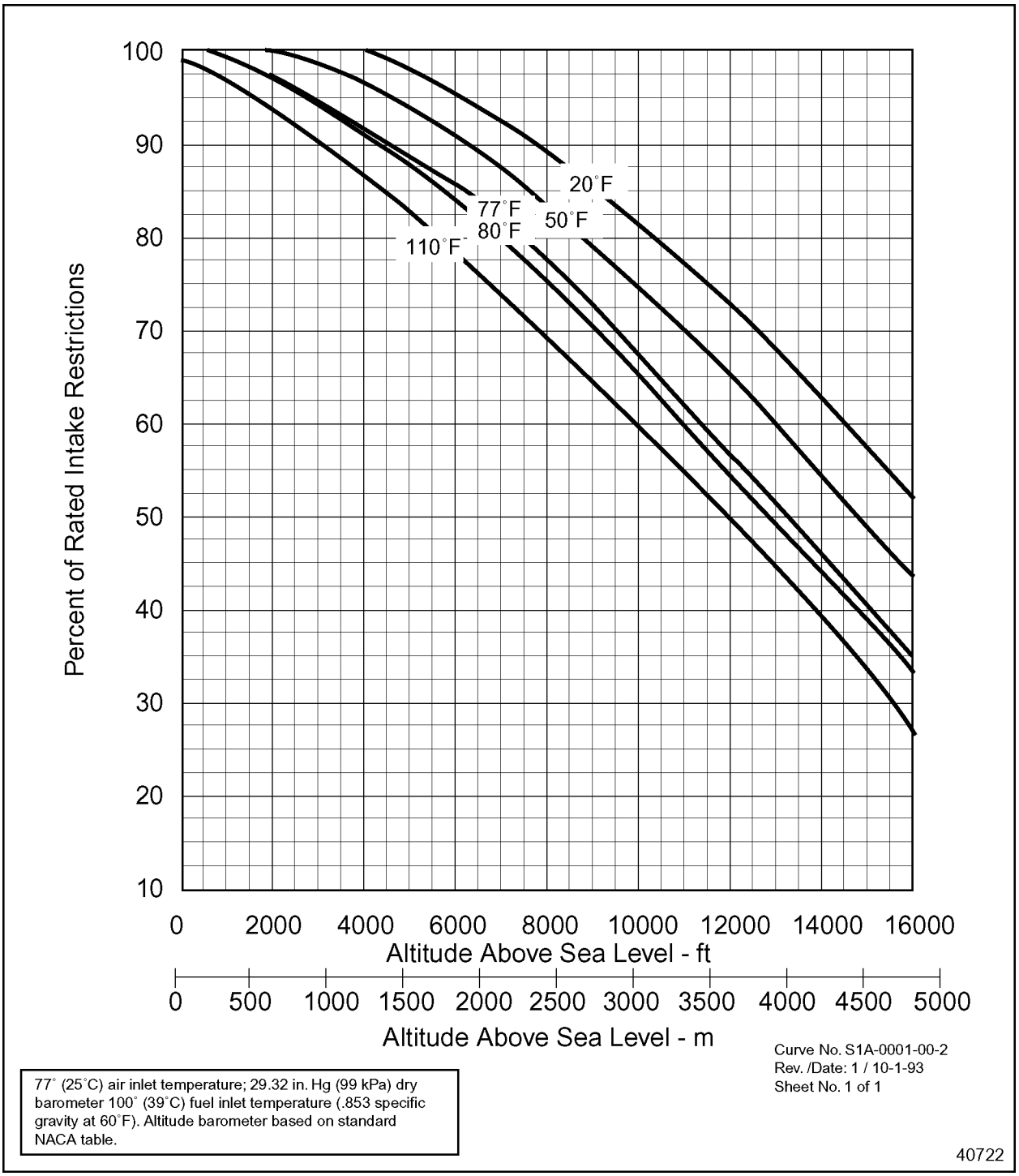

Figure 4-9 Altitude vs. Inlet Restriction

Install the restriction indicator as close to the turbocharger compressor inlet as practical, but no closer than 127 mm (5 in.).

Compensate for the added restriction incurred from piping between the cleaner and the turbocharger inlet when the restriction indicator is installed at the air cleaner.

 Copyright © 2001 DETROIT DIESEL CORPORATION

4.2.4 PIPEWORK

Give careful attention to the pipework and associated fittings used in the inlet system in order to minimize restriction and maintain reliable sealing.

Keep piping lengths short to minimize the number of bends and restriction incurred in the system. Use smooth bend elbows with a bend radius to tube diameter (R/D) ratio of at least 2.0 and preferably 4.0.

Keep air ducts away from heat sources such as exhaust manifolds, etc. Use appropriate insulation or shielding to minimize radiated heat from these sources to the inlet system.

Pipework Material Specifications

Aluminum or aluminized steel seamless tubing should be used. The tube ends require a 2.3 mm (0.09 in.) minimum bead to retain hose and clamp connections.

Fiberglass piping between the air cleaner and the turbocharger compressor inlet is also acceptable.

DDC does not recommend the use of mitered elbows of less than five sections.

Diffusers

Make any necessary cross-sectional changes in the piping diameter gradually rather than using sudden expansions.

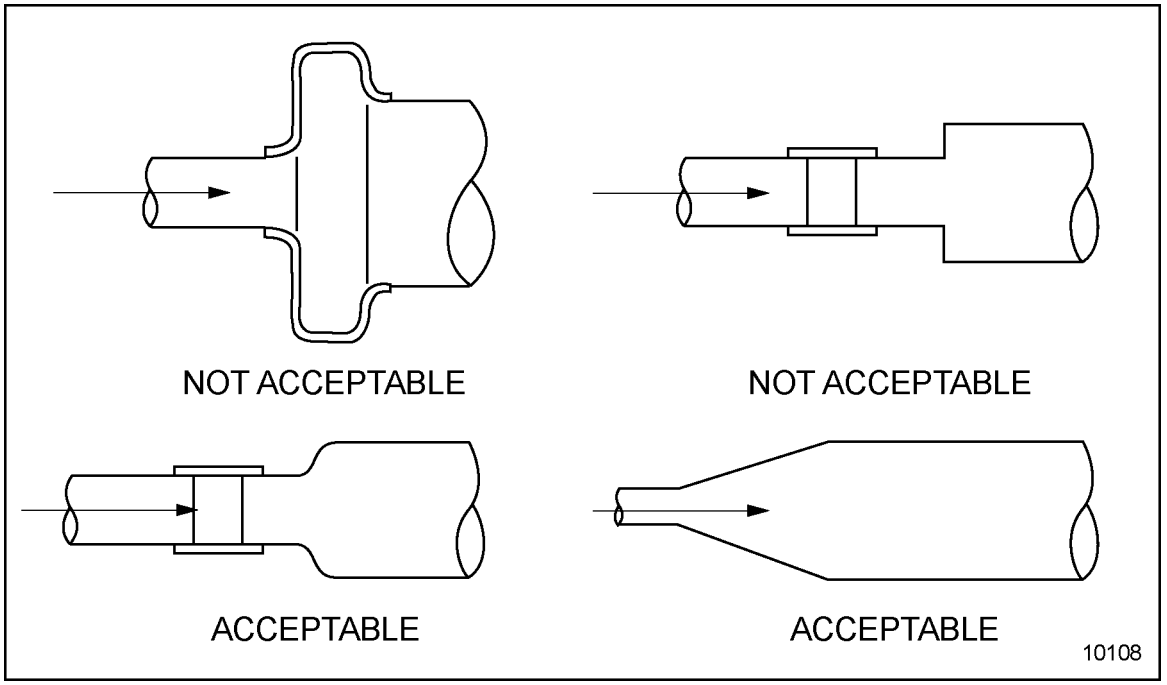

Figure 4-10 Diffuser Configurations

All information subject to change without notice.
7SA2000 0103 Copyright © 2001 DETROIT DIESEL CORPORATION

4.2.5 HOSE CONNECTIONS

Use the following for hose connections:

- ☐ Plain (non reinforced) hose sections to connect items of rigid pipework which are in line and close together, or have little relative motion.
- ☐ A short section of reinforced hose between the ductwork sections where significant relative motion or misalignment occurs. High quality “Hump" hose is capable of meeting these requirements.
- ☐ Spring loaded clamps to provide positive clamping and to prevent piping separation.

DDC does not approve the use of plain bore hoses with internal coil spring insertions.

Plain hoses used in the inlet system must be of adequate specification to withstand service conditions. The basic requirements are listed in Table 4-3.

Service Conditions	Basic Requirements
Hose Material	Synthetic Rubber
Oil Resistance	Resistant to fuel oil and lubricating oil on both internal and external surfaces
Maximum Working Temperatures	105°C (220°F)
Working Pressure	Up to 12.5 kPa (50 in. H_2O) depression (negative pressure)

Table 4-3 Hose Specifications for the Inlet Side of the Turbocharger

4.3 DESIGN GUIDELINES

The installed inlet system must be designed to supply clean, dry, cool air to the engine with minimum restriction. The system must also provide reliable sealing, durability, and require minimal maintenance.

NOTICE:
Never allow the turbocharger to support any weight of the air intake system.

The main design criteria for the air intake system includes:

- ☐ Air inlet flow
- ☐ Air intake restriction
- ☐ Temperature rise from ambient to turbo inlet

Refer to sheet 2 of the performance curve (refer to chapter) for limits on each of these criteria. Inlet location, not mentioned on sheet 2, is also important.

 Copyright © 2001 DETROIT DIESEL CORPORATION

4.3.1 MAXIMUM AIR INLET FLOW

The first step in the design of the air inlet system is to determine the maximum air flow requirement for the engine. This information for Series 2000 engines is listed on sheet 2 of the performance curve (refer to chapter).

4.3.2 AIR INLET SYSTEM RESTRICTION

Recommended pipe sizes may be used for the initial sizing of the air inlet system. Increase the pipe size or modify the piping configuration if the air intake restriction exceeds the maximum limit.

The installation of an air inlet restriction indicator in the air intake system is recommended.

The restriction of the air inlet system is equal to the sum of the individual restrictions in the system. These include rain caps, inlet hoods, air cleaners, and piping. See Figure 4-11.

Rain Cap or Inlet Hood Restriction	_____	in. H_2O
Precleaner Restriction	+ _____	in. H_2O
Air Cleaner Restriction	+ _____	in. H_2O
Piping Restriction	+ _____	in. H_2O
	_____	
Total Air Inlet Restriction	_____	in. H_2O

37056

Figure 4-11 Air Inlet System Calculation

4.3.3 INLET LOCATION

Position the air cleaner inlet so that air is drawn from an area clear of water splash with the lowest possible dust concentration; an area that minimizes:

- ☐ The temperature rise from ambient to turbo inlet
- ☐ The possibility of exhaust fumes and crankcase emissions being drawn into the inlet system

All information subject to change without notice.
7SA2000 0103 Copyright © 2001 DETROIT DIESEL CORPORATION

4.4 TESTING REQUIREMENTS

A thorough evaluation of the air inlet system will include:

- ☐ Complete descriptions and documentation of the system in the DDC End Product Questionnaire (EPQ) form
- ☐ Adequate instrumentation
- ☐ Proper test preparation
- ☐ Accurate tests
- ☐ Data analysis and documentation
- ☐ Diagnostics (troubleshooting) and corrective action (if necessary)

These tests must be run on all new installations, engine repowers, or whenever modifications have been made to the engine, air inlet system, engine load, duty cycle, or environmental operating conditions.

The EPQ form must be completed.

4.4.1 INSTRUMENTATION

This section describes the instruments and methods needed to measure the temperatures and pressures of air inlet systems.

Temperature Measurement

Use a precision thermocouple and an appropriate read-out device to measure temperatures.

Thermocouples should be located downstream of the pressure taps.

 Copyright © 2001 DETROIT DIESEL CORPORATION

Pressure Measurement

Use a precision gage or a water manometer capable of reading 5.0 kPa (20 in. H_2O).

For most accurate results, combine four static pressure taps (see Figure 4-12 and Figure 4-13) to make a piezometer ring to measure static pressure in straight pipe sections.

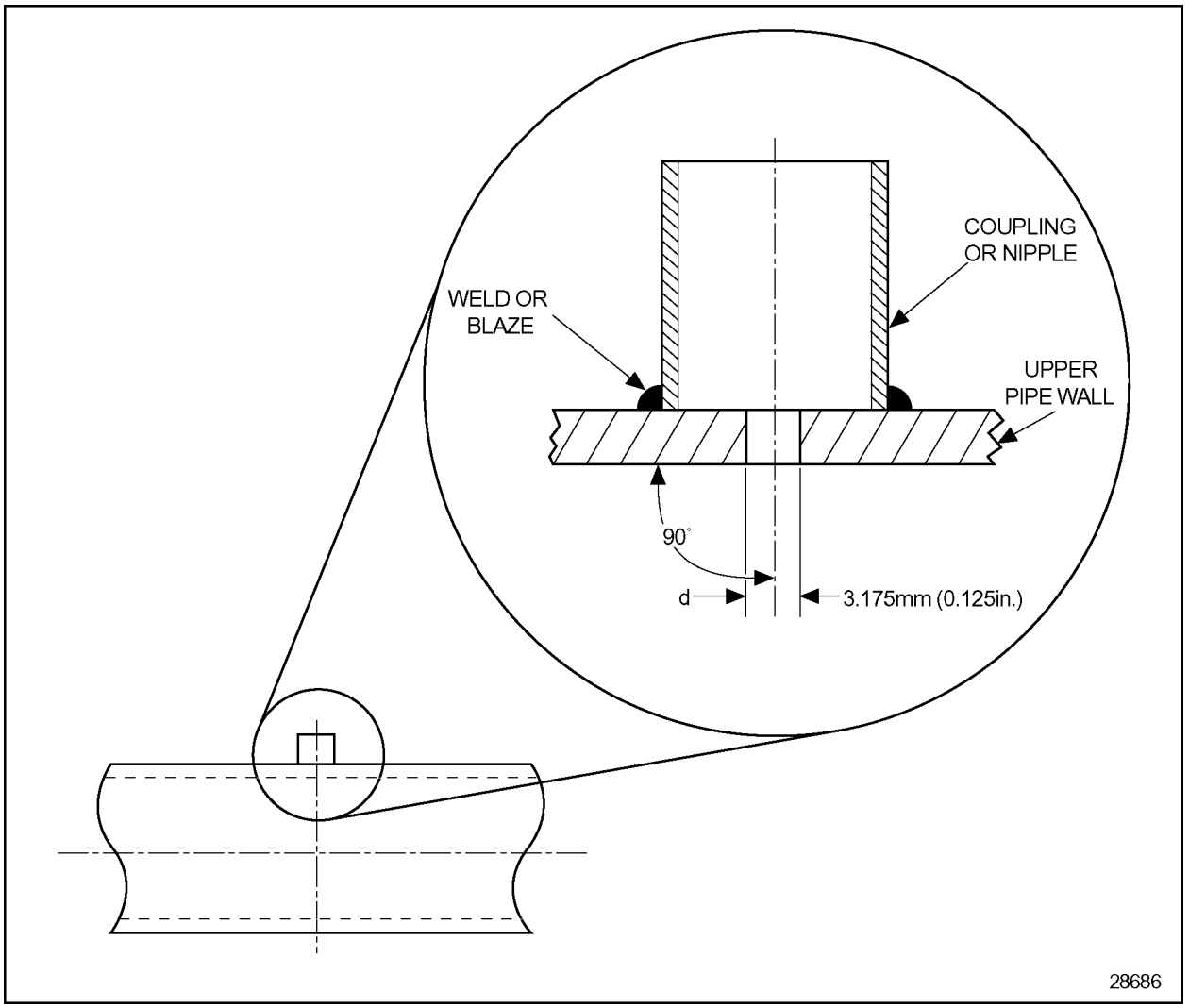

Figure 4-12 Static Pressure Tap

All information subject to change without notice.
7SA2000 0103 Copyright © 2001 DETROIT DIESEL CORPORATION

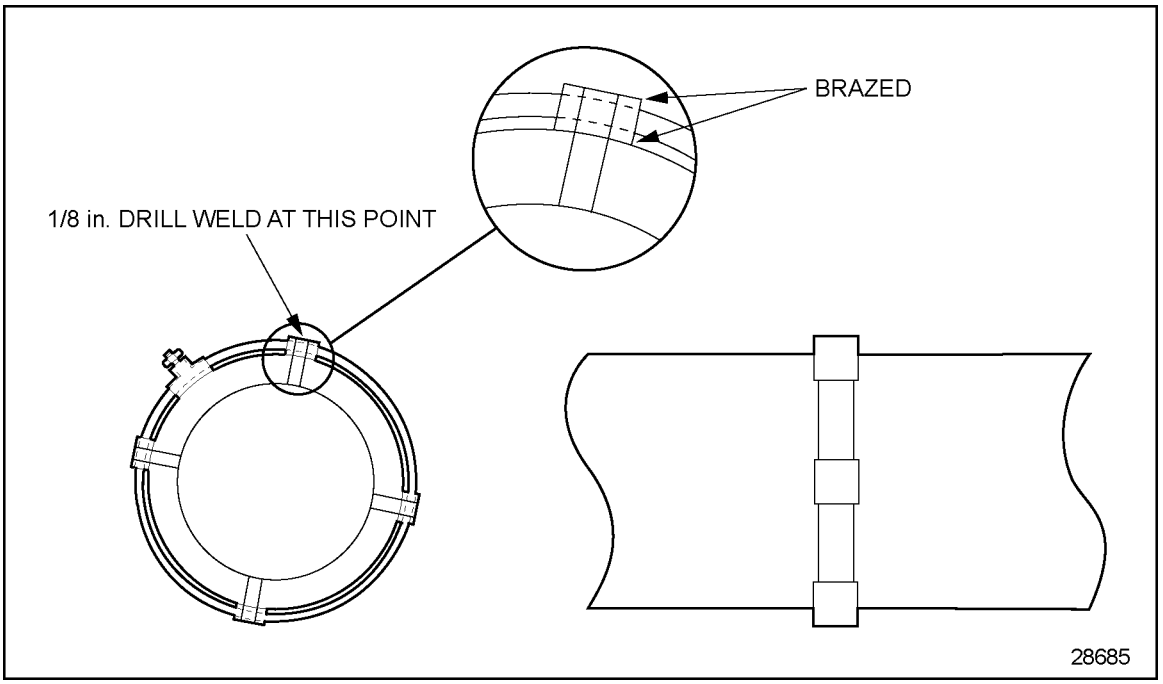

Figure 4-13 Piezometer Ring

The piezometer ring should be placed within 12.7 mm (5 in.) of the desired measurement location.

The instrumentation should be placed perpendicular to the plane of the bend where measurement on a bend is unavoidable.

 Copyright © 2001 DETROIT DIESEL CORPORATION

Location

See Figure 4-14 for the location of temperature and pressure measurements needed to evaluate the air inlet system. The Series 2000 8V engine is shown in the illustration; temperature and pressure measurement locations are similar for the Series 2000 12V and 16V. These measurements must be done on both turbochargers.

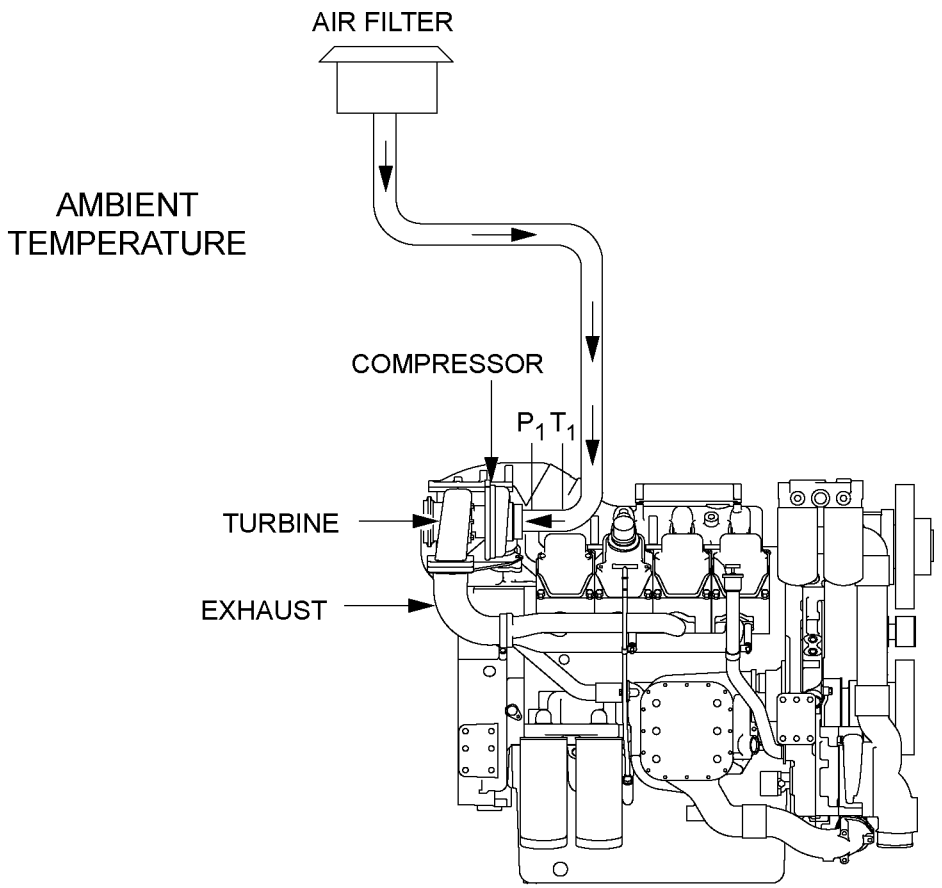

Thermocouple Symbol	Thermocouple Measurement	Thermocouple Location Description
T_1	Air Inlet Temperature	Within 127 mm (5 in.) of the Turbocharger

Pressure Taps Symbol	Pressure Taps Measurement	Pressure Taps Location Description
P_1	Air Inlet Restriction	Within 127 mm (5 in.) of the Turbocharger, in a Straight Section After the Last Bend

40273

Figure 4-14 Typical Instrumentation Location

All information subject to change without notice.
7SA2000 0103 Copyright © 2001 DETROIT DIESEL CORPORATION

4.4.2 INLET SYSTEM RESTRICTION

The maximum permitted inlet restriction for a system with a clean air cleaner is 3.0 kPa (12 in. H_2O) at sea level. The maximum permitted inlet restriction for a system with a dirty air cleaner is 5.0 kPa (20 in. H_2O) at sea level.

4.4.3 MAXIMUM TEMPERATURE RISE–AMBIENT TO TURBOCHARGER INLET

The temperature differential between the ambient temperature and the temperature at the turbocharger inlet (T_1) needs to be determined. The maximum temperature differential for the Series 2000 engine is 16.7°C (30°F) and is listed on sheet 2 of the performance curve (refer to chapter).

4.5 TEST

Thorough preparations prior to testing will ensure accurate results.

- ☐ Confirm all instrumentation and equipment is in good working condition and calibrated.
- ☐ Tests should be run on a production unit package installed in unit or vehicle representative of the final package to be released.
- ☐ Shutters must be fully opened and fan drive mechanisms in the fully engaged position.
- ☐ Engine should be at normal operation temperature and run at full load.

A sample data sheet for the air inlet system test is given below.

Turbocharged Engine

Symbol	Description	Measurement
T_1	Air Inlet Temperature B Bank (R Bank)	_____
P_1	Air Inlet Restriction B Bank (R Bank)	_____
T_2	Air Inlet Temperature A Bank (L Bank)	_____
P_2	Air Inlet Restriction A Bank (L Bank)	_____

41068

Figure 4-15 Air Inlet System Data Sheets

 Copyright © 2001 DETROIT DIESEL CORPORATION

THIS PAGE INTENTIONALLY LEFT BLANK

 Copyright © 2001 DETROIT DIESEL CORPORATION

5 EXHAUST SYSTEM

The purpose of the exhaust system is to remove the exhaust gases to an appropriate discharge location and to reduce the engine noise to a satisfactory level. See Figure 5-1 for a schematic of the Series 2000 8V exhaust system.

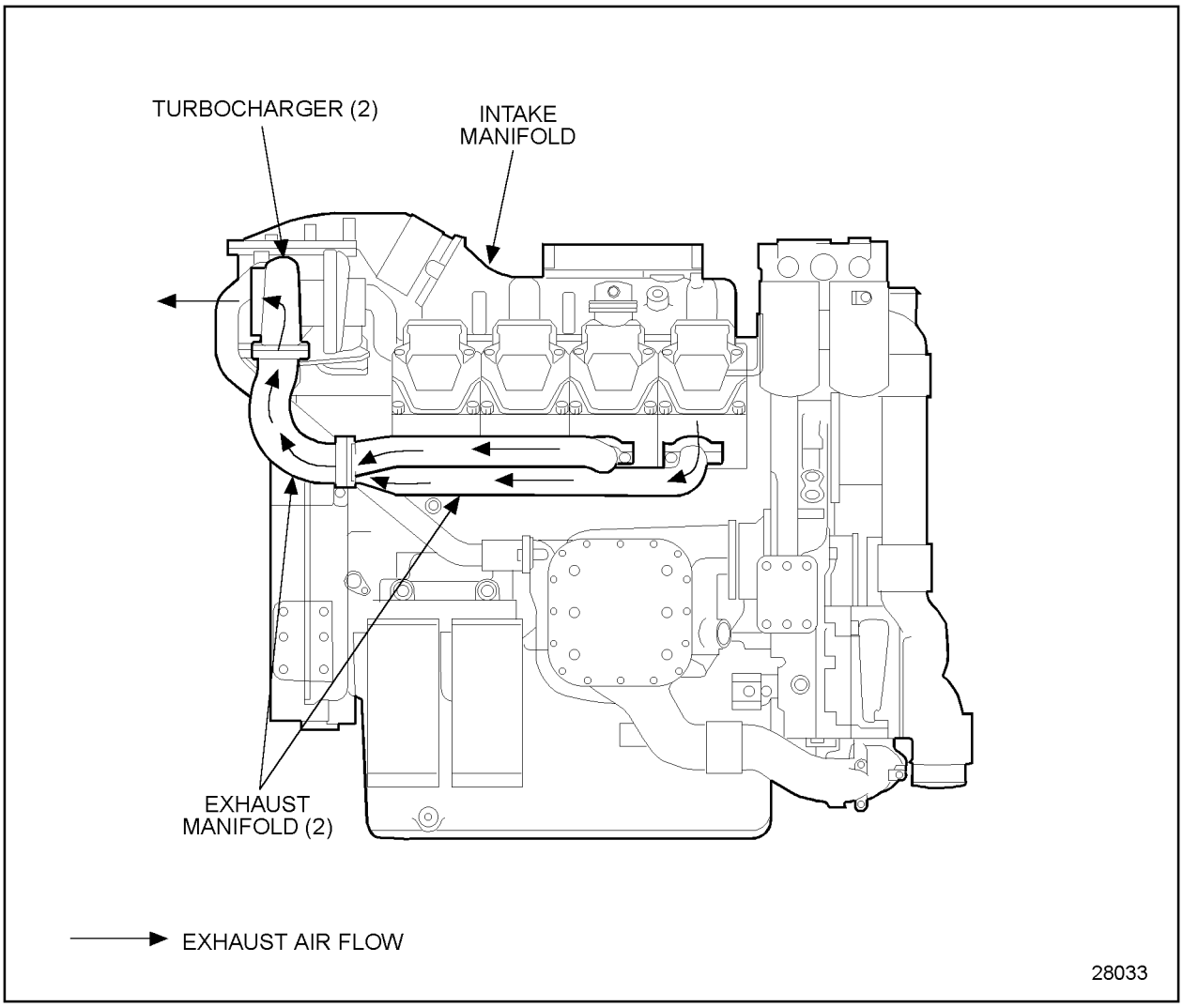

Figure 5-1 Series 2000 8V Exhaust System Schematic

 Copyright © 2001 DETROIT DIESEL CORPORATION

See Figure 5-2 for a schematic of the Series 2000 12V exhaust system.

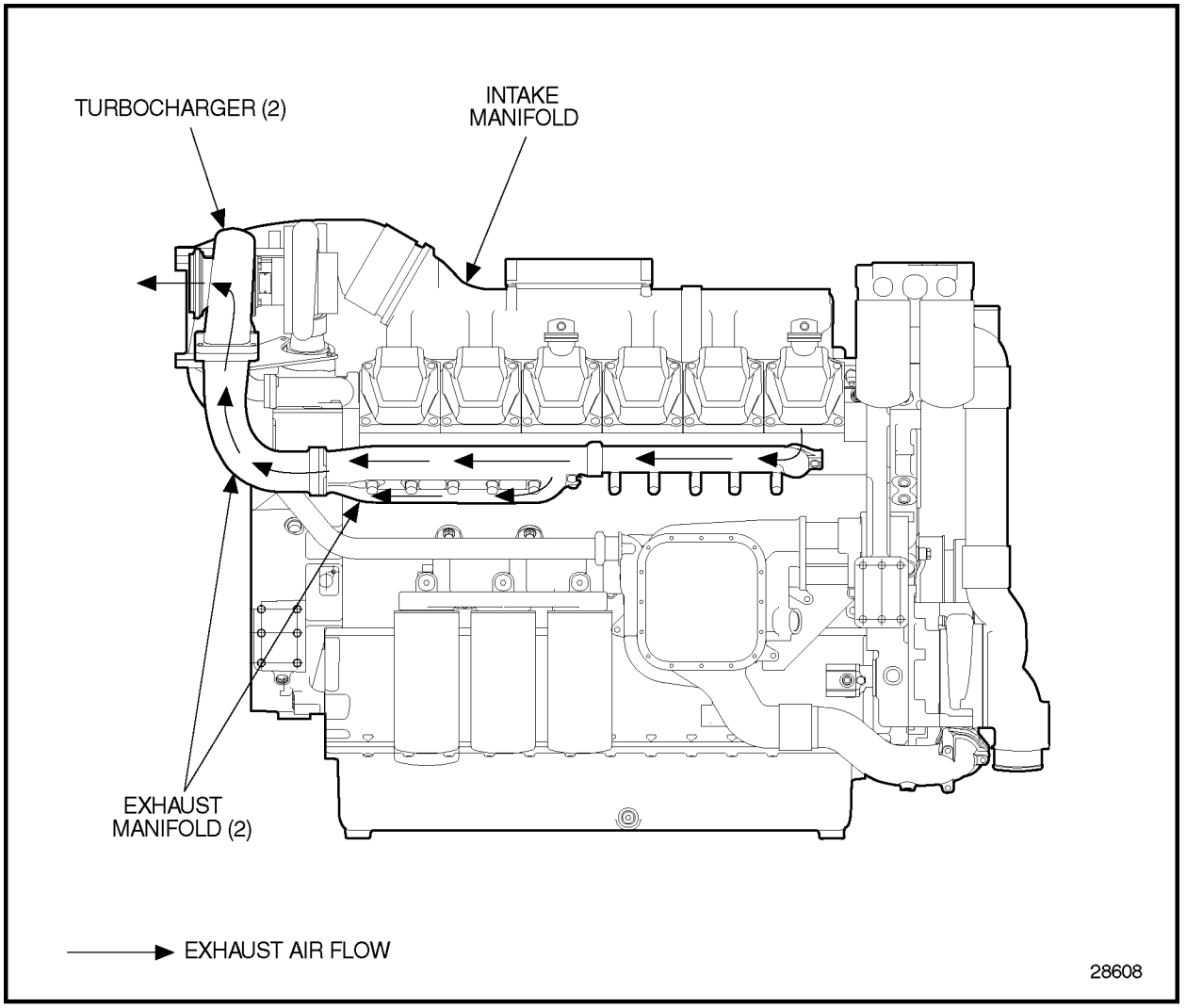

Figure 5-2 Series 2000 12V Exhaust System Schematic

All information subject to change without notice.
7SA2000 0103 Copyright © 2001 DETROIT DIESEL CORPORATION

See Figure 5-3 for a schematic of the Series 2000 16V exhaust system.

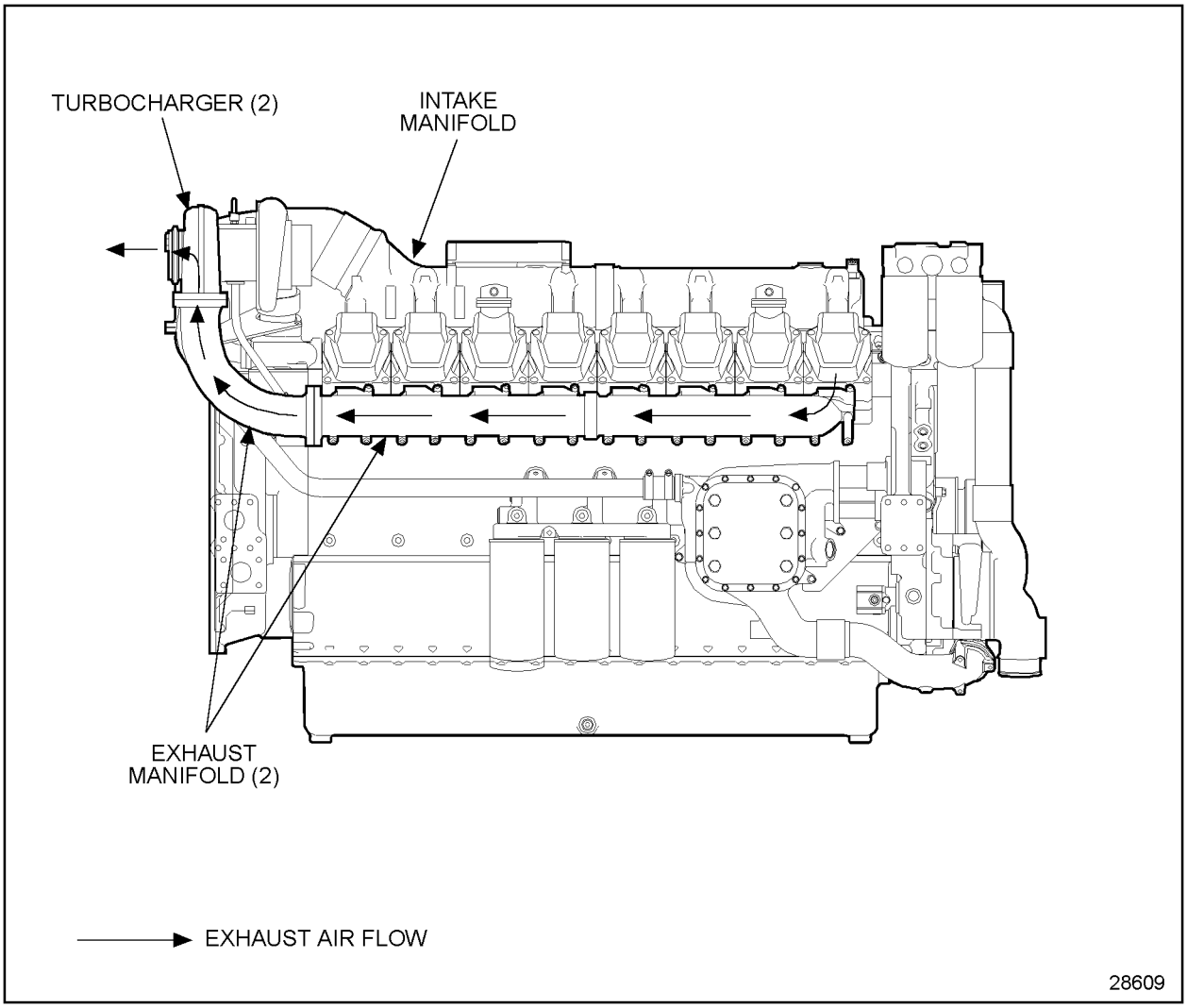

Figure 5-3 Series 2000 16V Exhaust System Schematic

5.1 EXHAUST SYSTEM DESCRIPTION

The exhaust system consists of:

- ☐ Exhaust valves
- ☐ Exhaust manifold
- ☐ Turbocharger
- ☐ Exhaust piping
- ☐ Muffler

Exhaust gases exit the cylinders through exhaust ports and the exhaust manifold. These exhaust gases expand through the exhaust turbine and drive the turbocharger compressor impeller. The gases are then released through the exhaust pipes and the muffler to the atmosphere.

 Copyright © 2001 DETROIT DIESEL CORPORATION

5.2 INSTALLATION REQUIREMENTS

The exhaust system design must keep the resistance to gas flow (back pressure) of the exhaust system as low as possible and within the limits specified for a Series 2000 engine.

The system should minimize noise emissions.

Adequate clearance must be provided for the complete exhaust system. The exhaust must not pass too close to the filters, fuel lines, fuel pump, starter, alternators, etc.

The minimum required exhaust pipe inner diameter (I.D.) for a Series 2000 engine can be found on sheet 2 of the performance curve (refer to chapter).

These sizes may be used for the initial sizing of the exhaust system. Increase the pipe size or modify the piping configuration if the calculated back pressure exceeds the maximum limit.

5.2.1 BACK PRESSURE

The exhaust system will produce a certain back pressure for the exhaust gases. The design of the exhaust system should keep the back pressure as low as possible. Maximum allowable exhaust back pressure is 76 mm Hg (3 in. Hg) at full load and rated speed.

One or more of the following factors usually causes excessive back pressure:

- ☐ Small exhaust pipe diameter
- ☐ Excessive number of sharp bends in the system
- ☐ Long exhaust pipe between the manifold and muffler
- ☐ High muffler resistance

Back pressure that is too high may result in:

- ☐ Reduced power
- ☐ Poor fuel economy
- ☐ High combustion temperature
- ☐ Over-heating
- ☐ Excessive smoke
- ☐ Reduced engine life

5.2.2 NOISE

The exhaust system is one of the principal noise sources on many types of applications.

The noise arises from the intermittent release of high pressure exhaust gas from the engine cylinders, causing pulsations in the exhaust pipe. These pulsations lead to discharge noise at the outlet and to noise radiation from the exhaust pipe and muffler shell surfaces. A properly matched muffler can achieve efficient attenuation with minimum exhaust restriction. Double wall piping helps to reduce radiant noise.

All information subject to change without notice.
7SA2000 0103 Copyright © 2001 DETROIT DIESEL CORPORATION

5.2.3 FLEXIBLE FITTINGS

A flexible exhaust fitting or joint should separate the engine and exhaust system. Premature failure of the turbocharger, manifold, piping, muffler, or joints caused by engine vibrations may be prevented by using flexible joints or fittings. The flexible joint allows for thermal expansion and facilitates alignment of the engine with the exhaust system piping. Exhaust pipe joints and connections should be free from leaks.

NOTICE:
Never allow the engine manifold or turbocharger to support the weight of the exhaust system.

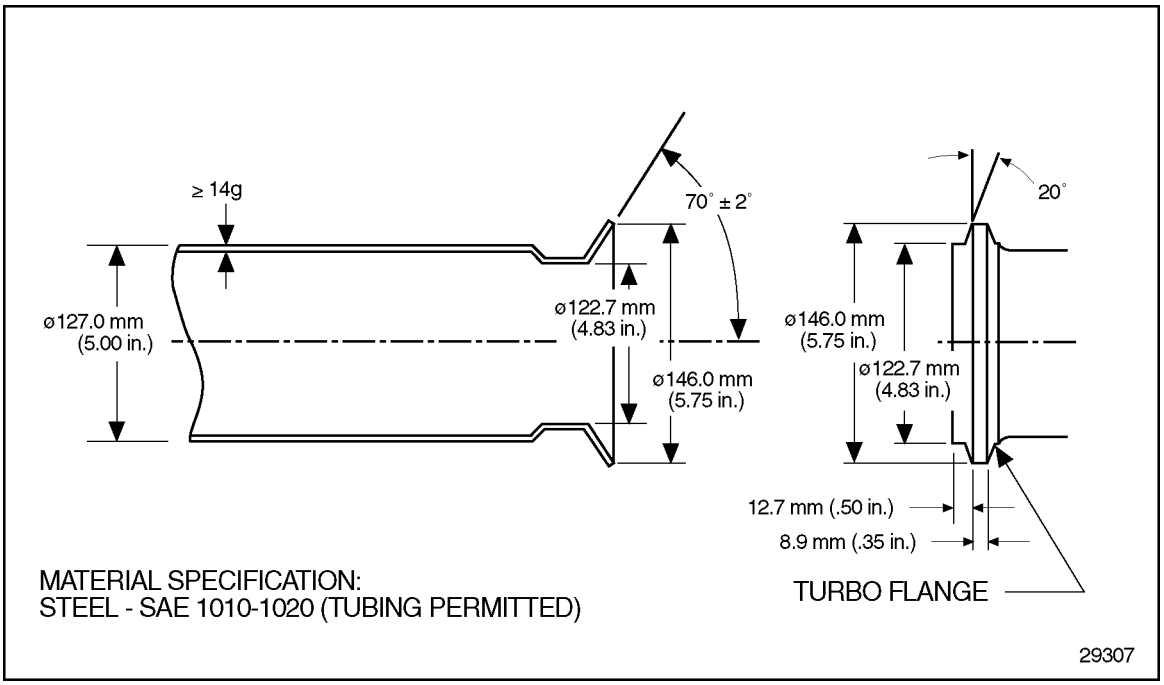

Figure 5-4 Turbine Outlet for the Series 2000 8V, 12V, and 16V Engines

5.2.4 MATERIAL SPECIFICATIONS FOR PIPEWORK

The minimum required exhaust pipe diameter for the Series 2000 engines can be found on sheet 2 of the performance curve (refer to chapter).

The minimum required material used for pipework is steel (SAE 1010-1020). Other materials may be used.

The exhaust piping support must be secure, but still allow for thermal expansion and contraction. Mounting points should be on structurally sound members, such as the frame.

 Copyright © 2001 DETROIT DIESEL CORPORATION

5.2.5 SPARK ARRESTERS

Spark arresters enable diesel engines to operate in hazardous areas by reducing the discharge of hot carbon particles through the exhaust pipe.

A stainless steel spiral causes the exhaust gases to rotate, throwing the hot carbon particles against the outer casing and cooling them before discharge (see Figure 5-5).

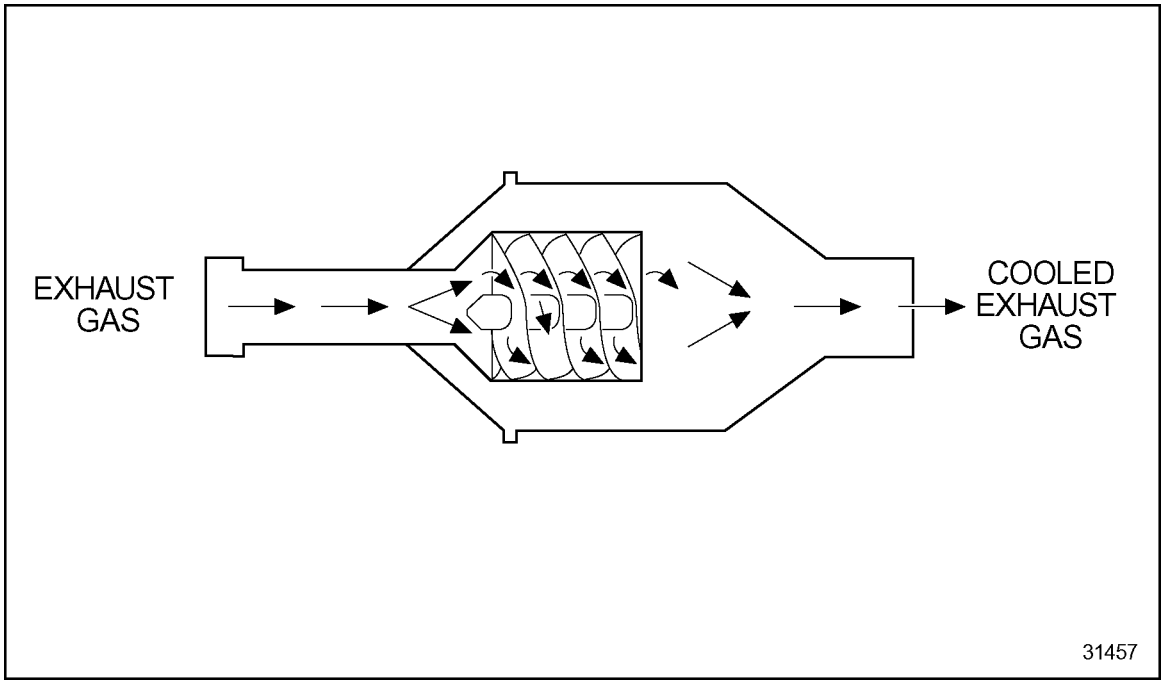

Figure 5-5 Spark Arrester

Special spark arresters or flame traps must be fitted to both inlet and exhaust systems to prevent explosion from engine induced sparks when flammable gases are present in the atmosphere.

Spark arresters must be properly sized and cleaned regularly to prevent exhaust restrictions from being exceeded.

All information subject to change without notice.
7SA2000 0103 Copyright © 2001 DETROIT DIESEL CORPORATION

5.2.6 EXHAUST DILUTERS

Exhaust diluters are designed to mix large quantities of ambient air with the exhaust gas before releasing it to the atmosphere (see Figure 5-6).

This cools and dilutes the exhaust gas constituents to levels that can be acceptable to the operator and other people near the equipment.

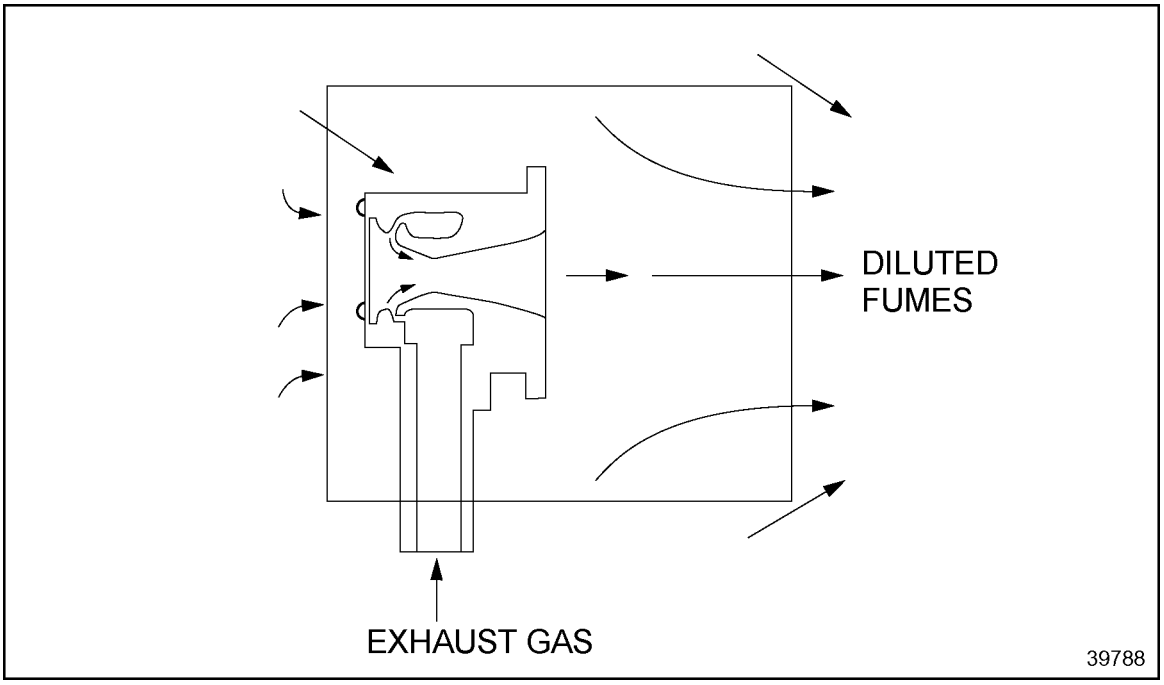

Figure 5-6 Exhaust Diluter

The fine clearance of the nozzle gap may particularly affect back pressure in service, it should be sized properly and periodic checks should be made to ensure that back pressure is still within the specified limits.

5.2.7 MANIFOLDING OF ENGINES INTO A COMMON EXHAUST SYSTEM

DDC does not approve of more than one engine sharing an exhaust system because undesirable pulsations may result.

5.3 DESIGN REQUIREMENTS

The exhaust systems for Series 2000 powered equipment must function under a variety of environmental conditions. Exposure to rain and snow and subjection to both thermal and mechanical stresses are inherent to equipment operation.

Stationary engines which operate inside a building must have an exhaust system which will remove the exhaust gases to a safe area and will keep both noise and temperature at acceptable levels.

 Copyright © 2001 DETROIT DIESEL CORPORATION

5.3.1 OUTLET LOCATION

Select the direction and location of the tailpipe exit to prevent the following:

- ☐ Recirculation of exhaust into the air inlet system
- ☐ Recirculation of exhaust through the radiator
- ☐ Obstruction of the machine operator's line of sight
- ☐ Excessive noise emissions

Vertical outlets on outdoor units must have some means of preventing water entry when not operating, such as a rain cap.

5.3.2 DRAINAGE

The exhaust pipe can accumulate a considerable amount of condensed moisture, especially when the pipe is long. A condensate trap and drain must be provided at the lowest point in the system to avoid internal corrosion.

Use one of the following to prevent entry of rain and snow with vertical exhaust systems:

- ☐ Fit a flap to the end of the exhaust tailpipe (this is not always acceptable due to clatter at low engine speeds)
- ☐ Turn the tailpipe end through 90° to give a horizontal outlet

A small drain hole may be incorporated in the lowest part of the exhaust system if the manifold has a downward exit and a curved pipe redirects the exhaust vertically upwards. Do not use a drain hole on applications with a blower fan, due to possible contamination of the radiator core from the slight exhaust leak.

5.3.3 MUFFLER LOCATION

Locate the muffler close to the engine for best overall noise reduction.

5.3.4 SYSTEM INSULATION

Exposed exhaust system parts should not be near wood or other flammable material.

CAUTION:

To avoid burn injury, an exhaust system inside a building should be covered with screen or insulation.

Insulating the system will reduce the heat radiation and the noise level caused by the exhaust system.

All information subject to change without notice.
7SA2000 0103 Copyright © 2001 DETROIT DIESEL CORPORATION

5.4 TESTING REQUIREMENTS

A thorough evaluation of the exhaust system will include:

- ☐ Complete descriptions and documentation of the system in the DDC End Product Questionnaire (EPQ) form
- ☐ Adequate instrumentation
- ☐ Proper test preparation
- ☐ Accurate tests
- ☐ Data analysis and documentation
- ☐ Diagnostics (troubleshooting) and corrective action (if necessary)

These tests must be run on all new installations, engine repowers, or whenever modifications have been made to the engines exhaust system.

Section II of the EPQ form must be completed.

5.4.1 MEASUREMENT OF EXHAUST BACK PRESSURE

Use a Magnehellic™ gauge or equivalent that measures mm Hg (in. Hg) to record the exhaust back pressure.

Use a piezometer ring to measure static pressure within 127 mm (5 in.) of the turbocharger discharge (see Figure 5-7 and Figure 5-8).

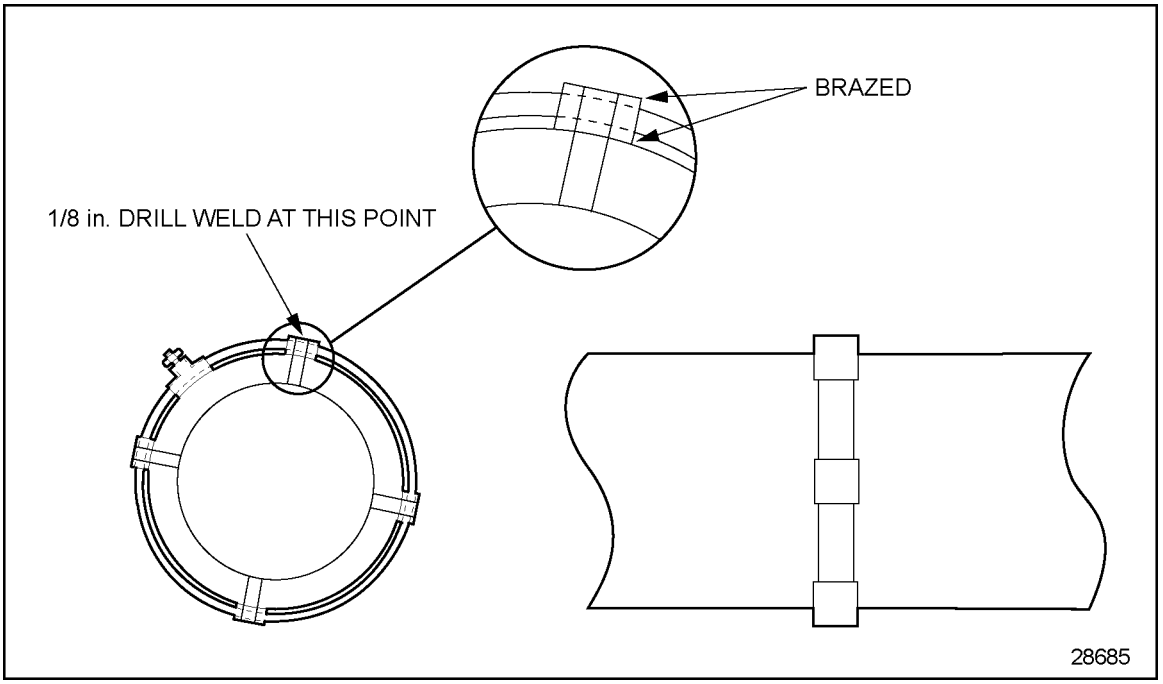

Figure 5-7 Piezometer Ring

 Copyright © 2001 DETROIT DIESEL CORPORATION

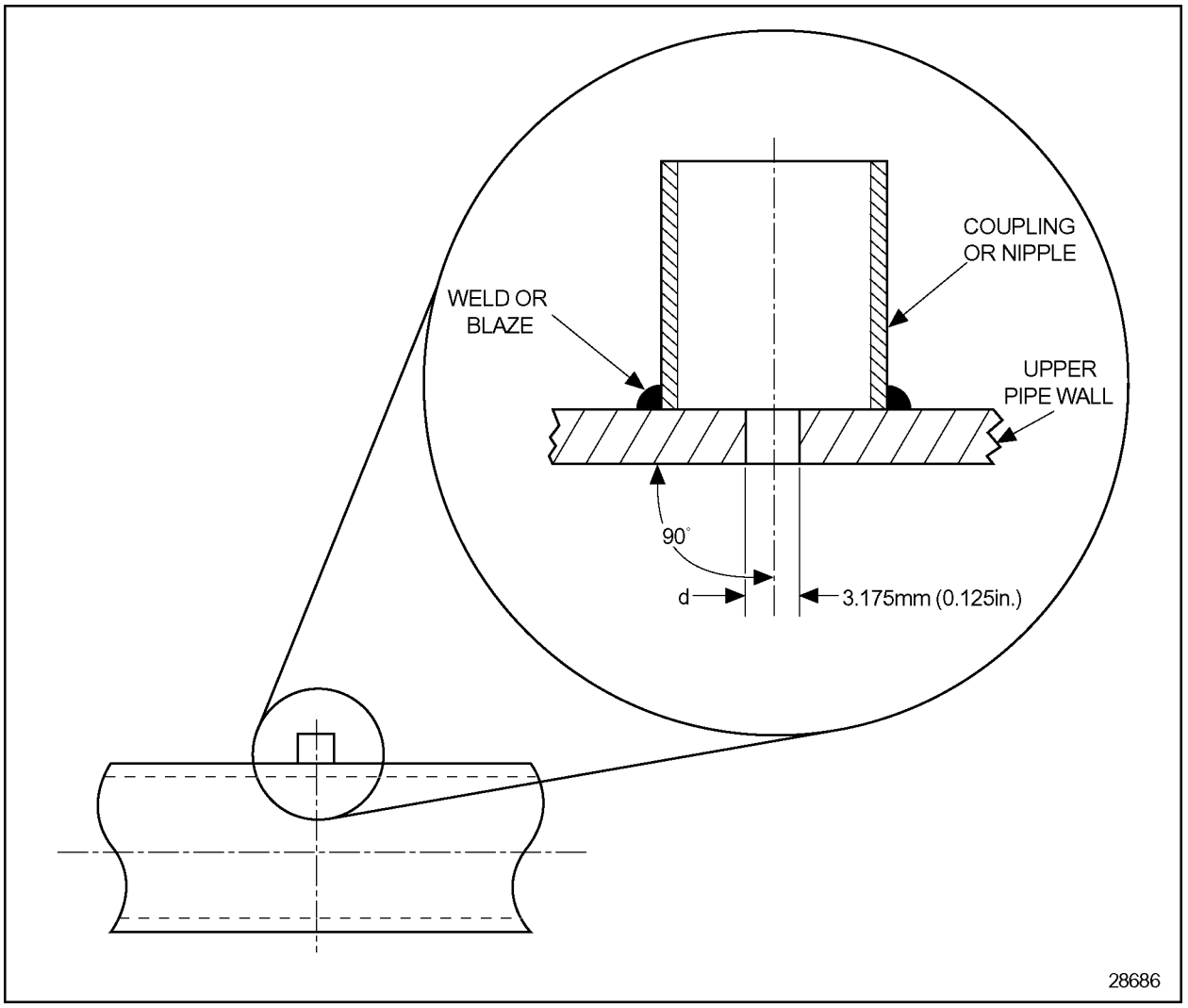

Figure 5-8 Static Pressure Tap

The instrumentation should be placed perpendicular to the plane of the bend where measurement on a bend is unavoidable.

All information subject to change without notice.
7SA2000 0103 Copyright © 2001 DETROIT DIESEL CORPORATION

6 COOLING SYSTEM

A well designed cooling system is a requirement for satisfactory engine performance and reliability. Thorough knowledge of the application, duty cycle, and environmental conditions is essential in designing and packaging the total cooling system. A properly designed system should still be able to perform within specifications after normal system degradation occurs.

6.1 TYPES OF COOLING SYSTEMS

Radiator cooling systems can be classified into two broad categories: rapid warm-up and conventional. Due to demand for higher horsepowers and emission control requirements, modern engines require that the turbocharged inlet air be cooled. As a result, charge air cooling (CAC) has become an integral part of all cooling systems.

6.1.1 RAPID WARM-UP COOLING SYSTEM (RECOMMENDED)

The rapid warm-up cooling system eliminates coolant flow through the radiator core during closed thermostat operation.

This reduces warm-up time and maintains coolant temperature near the thermostat start to open value. Having the deaeration tank (internal or remote) separated from the radiator core will accomplish this. External bleed and fill lines as well as internal standpipe(s) (radiator core air vent) are required in the deaeration tank. Proper size and location of these components are critical to having a balanced system. The fill line coolant return flow capabilities *must* exceed the flow into the tank under all operating modes. The rapid warm-up cooling system has also been called positemp, continuous deaeration, or improved deaeration.

Another advantage of this system is its ability to place a positive head on the water pump, thus reducing the possibility of cavitation. See Figure 6-1.

 Copyright © 2001 DETROIT DIESEL CORPORATION

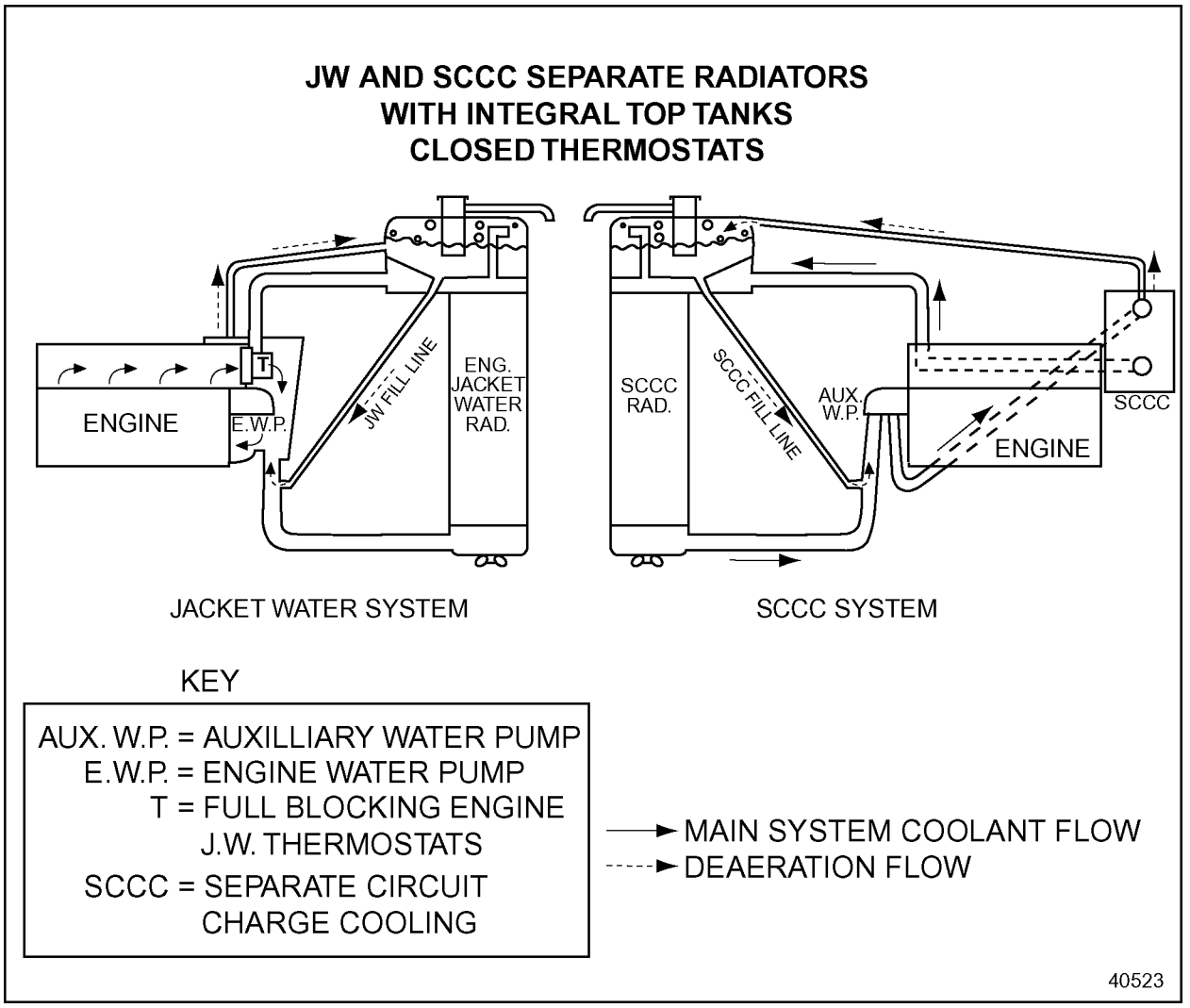

Figure 6-1 JW and SCCC Separate Radiators Integral Tank — Closed Thermostats

6.1.2 CONVENTIONAL COOLING SYSTEMS (NOT RECOMMENDED)

The conventional system does not have a fill line so the vented flow must pass through the core to return to the engine. This can lead to poor warm-up and the engine running too cool at light loads. The conventional system is not recommended.

6.2 COOLING SYSTEM CONFIGURATION

Series 2000 engines have two different cooling system configurations - jacket water after cooling (JWAC) and separate circuit charge cooling (SCCC). Rated engine horsepower determines which cooling system configuration is used. The ratings for Series 2000 engines are found in the Technical Data section (refer to chapter 14). The most current data may be found on the Power Evolution Network (PEN). Refer to the Technical Data section of this manual or PEN to determine if your system is JWAC or SCCC.

All information subject to change without notice.
7SA2000 0103 Copyright © 2001 DETROIT DIESEL CORPORATION

6.2.1 JACKET WATER AFTER COOLING

JWAC utilizes a single pump and heat exchanger to cool both the engine and the charge air cooler. The following illustrations show the coolant flow within the JWAC configured cooling system (see Figure 6-2 and Figure 6-3).

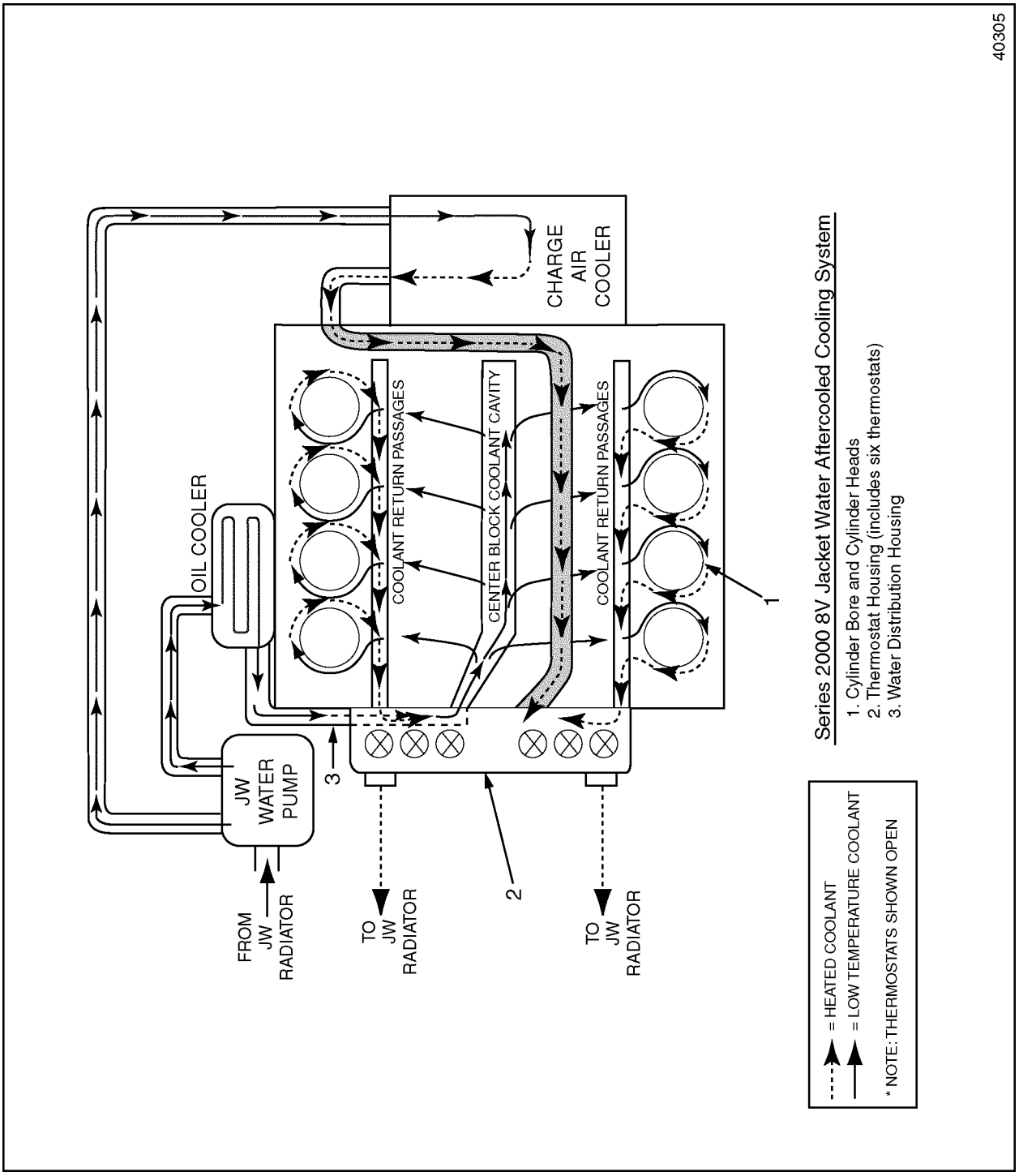

Figure 6-2 Series 2000 8V Jacket Water After Cooling

 Copyright © 2001 DETROIT DIESEL CORPORATION

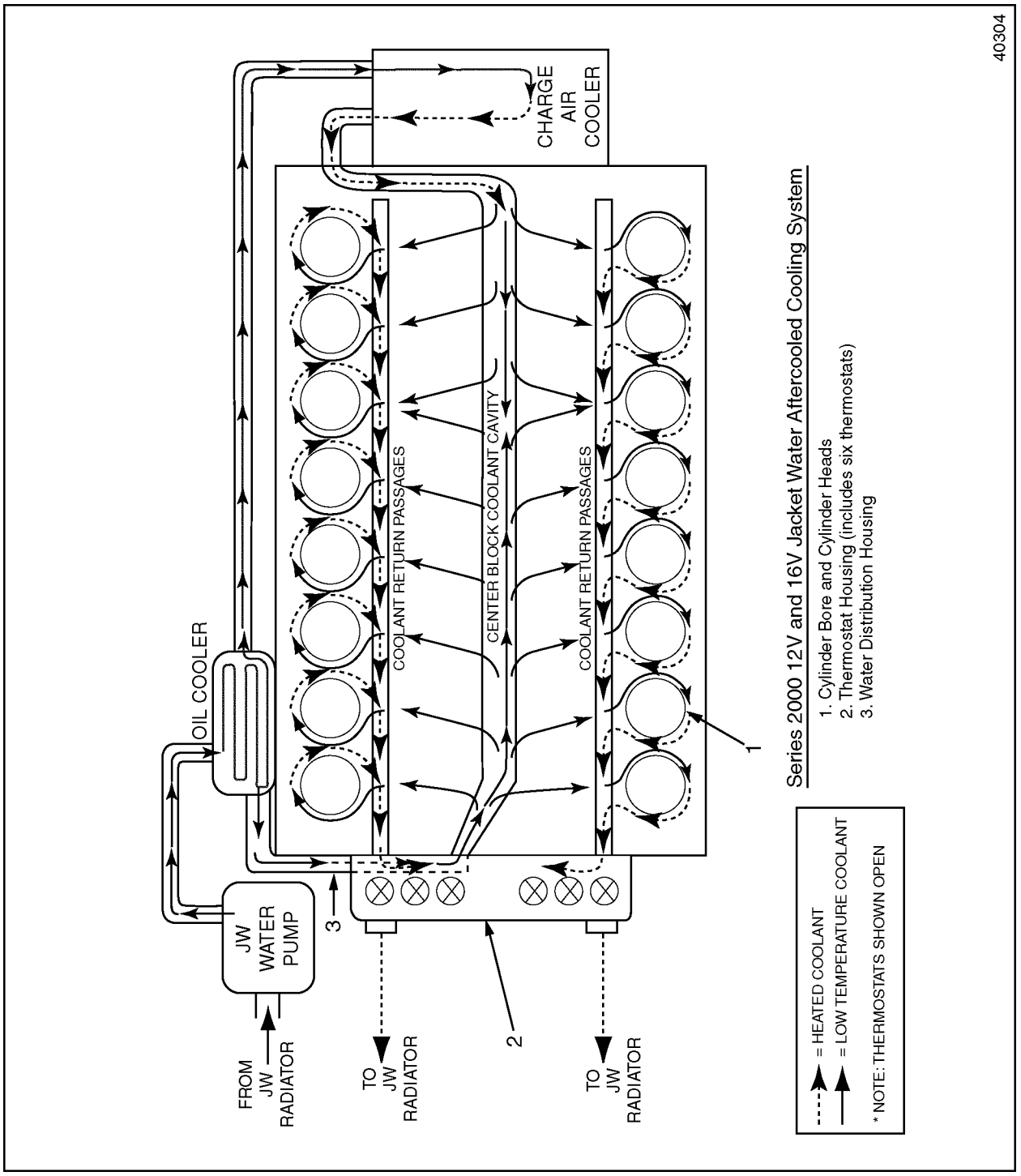

Figure 6-3 Series 2000 12 & 16V Jacket Water After Cooling

All information subject to change without notice.
7SA2000 0103 Copyright © 2001 DETROIT DIESEL CORPORATION

Thermostats

Most Series 2000 engines have two thermostat housings and 77°C (170°F) full blocking thermostats. 8V engines currently have six (6) thermostats; 12V and 16V engines have six (6) thermostats. Some 8V models have one thermostat housing.

The thermostat housings include a 3.6 mm "jiggle pin" vent hole. This is intended to assist in venting air from the cooling system, to the top tank of the radiator, when the thermostats are closed.

Venting - JWAC

The thermostat housing on the right hand side of the engine has a vent location in the top of the thermostat housing. This is intended to be used to connect a vent line to the radiator top tank. This vent line (6.0 mm [0.25 in.] I.D.) must go below the water level of the radiator top tank because this point in the cooling system will be under suction when the thermostats are open.

A vent is also located in the coolant pipe from the oil cooler to the charge air cooler on the right hand side of the engine. The vent is located close to where this pipe attaches to the charge air cooler. This vent location is always under pressure; the vent line should be attached to the top of the radiator top tank (see Figure 6-4 and Figure 6-5). Vent lines should have a 4.7 mm (3/16 in.) internal diameter.

 Copyright © 2001 DETROIT DIESEL CORPORATION

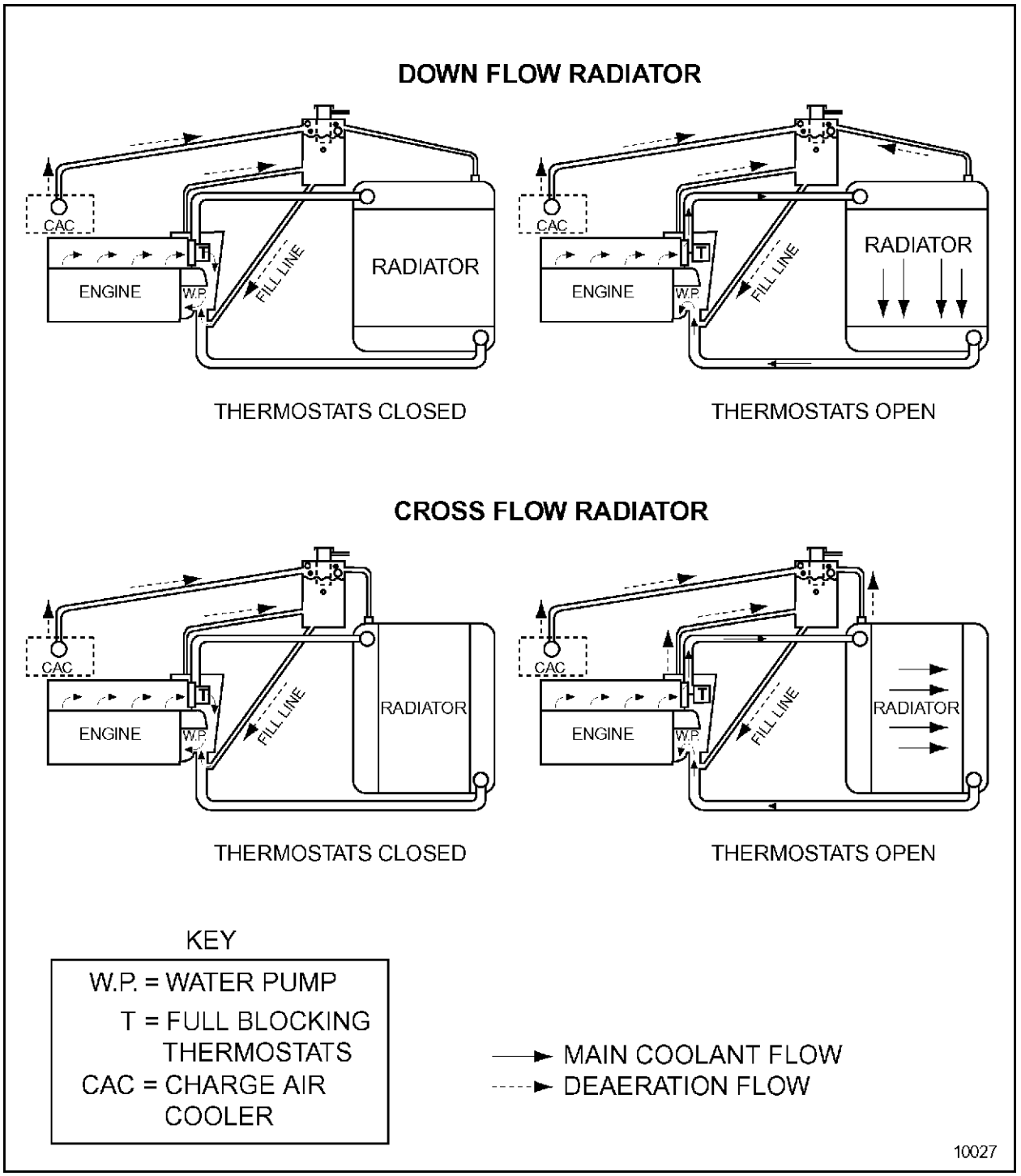

Figure 6-4 **Rapid Warm-up Cooling System - JWAC with Remote Tank, Cross Flow and Down Flow Radiators**

All information subject to change without notice.
7SA2000 0103 Copyright © 2001 DETROIT DIESEL CORPORATION

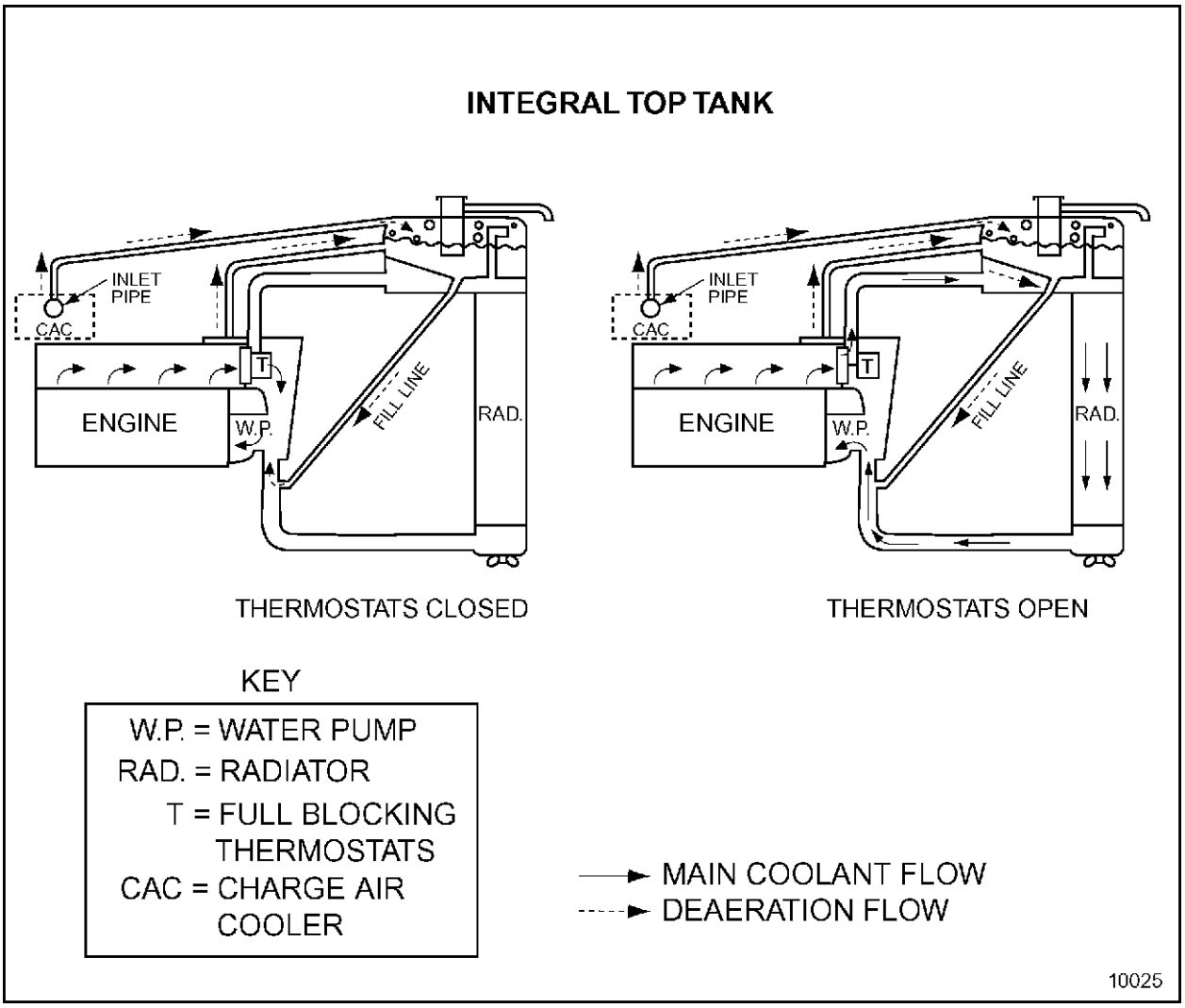

Figure 6-5 Rapid Warm-up Cooling System - JWAC with Integral Tank

6.2.2 SEPARATE CIRCUIT CHARGE COOLING

SCCC utilizes two circuits; one circuit employs a pump and heat exchanger for jacket water cooling while another circuit employs a separate pump and heat exchanger used to cool the charge air. The second water pump is mounted on the SAE C flange on the front cover.

The charge air cooling circuit must be designed to maintain the charge air cooler outlet coolant temperature at 25°C (45°F) above ambient with a maximum of 75°C (167°F).

The following illustrations show the coolant flow within the SCCC configured cooling system (see Figure 6-6 and Figure 6-7).

 Copyright © 2001 DETROIT DIESEL CORPORATION

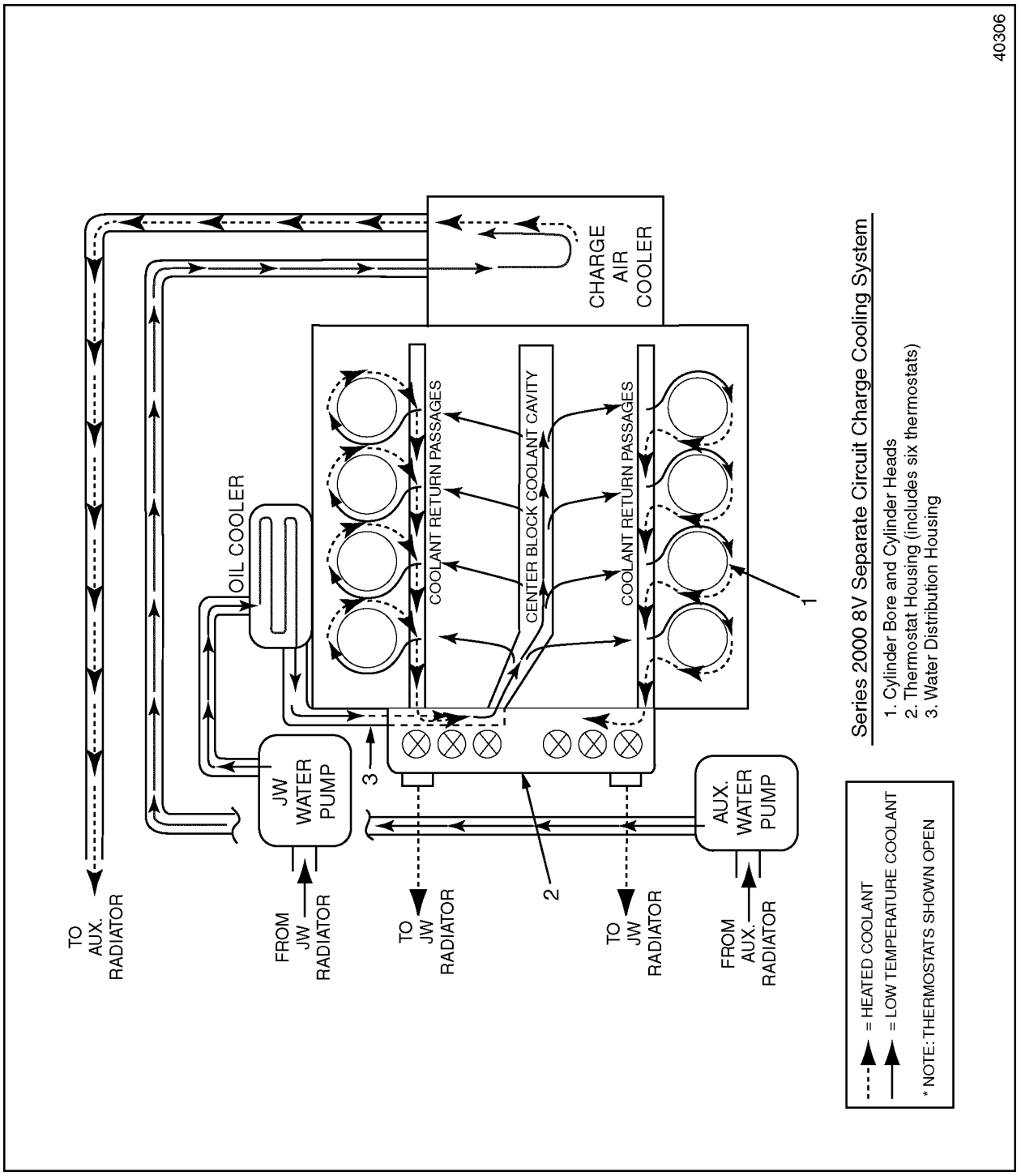

Figure 6-6 Series 2000 8V Separate Circuit Charge Cooling

All information subject to change without notice.
7SA2000 0103 Copyright © 2001 DETROIT DIESEL CORPORATION

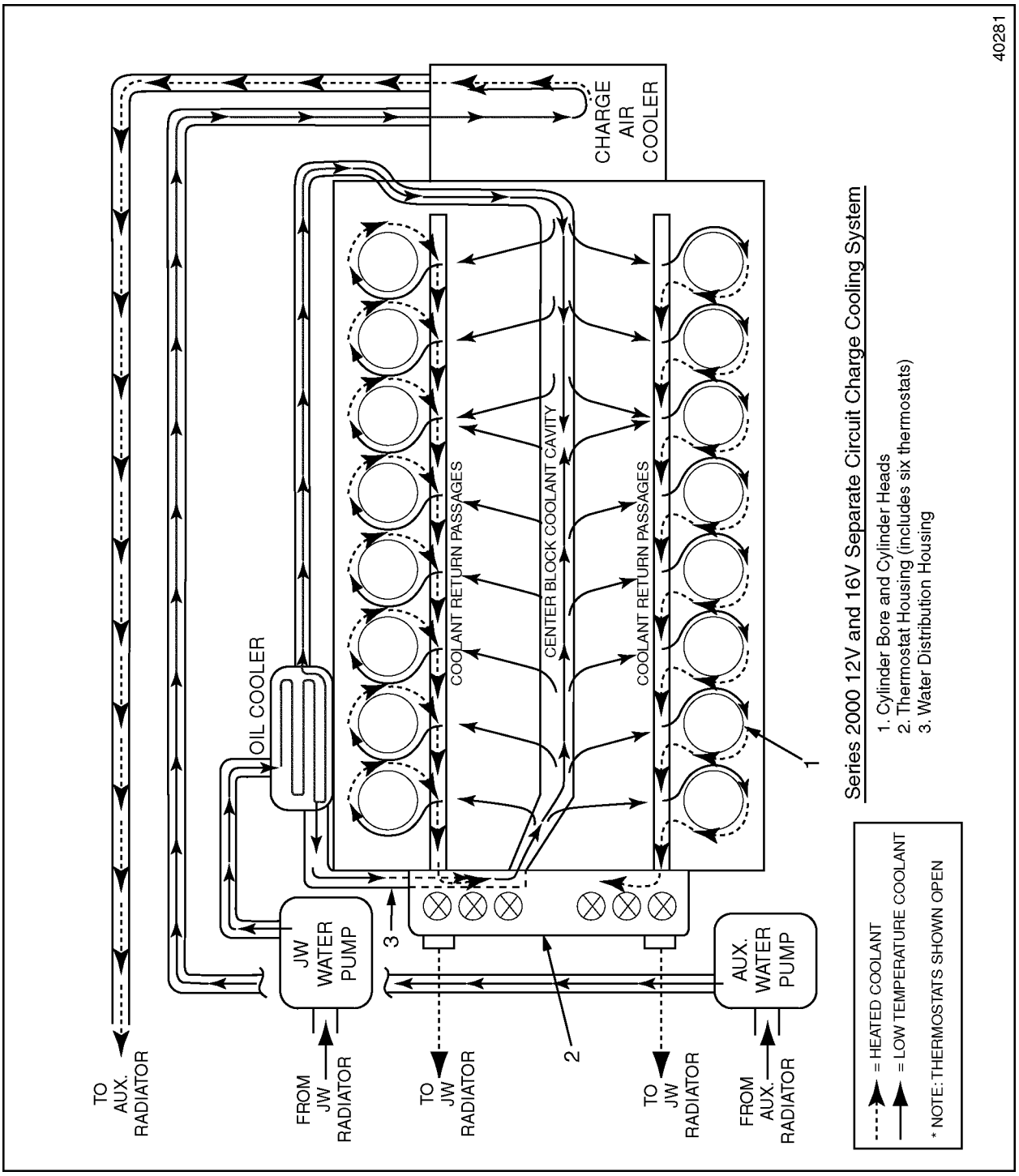

Figure 6-7 Series 2000 12 &16V Separate Circuit Charge Cooling

SCCC Thermostats

The standard SCCC Series 2000 constructional and industrial engine configuration built by DDC has (as of April 2001) an additional thermostat in a housing separate from the engine coolant thermostats. This single SCCC thermostat controls the coolant for this system to avoid extreme fluctuations during cold weather. It has an opening temperature of 32°C (90°F) and a fully open temperature of 44°C (111°F). To retrofit a system that presently does not have a thermostatically controlled system refer to publication 18SP538 for parts list and sketches. If the engine will be utilized continuously in warm climates year around, then the option is still available without a thermostat.

Venting - SCCC

Venting of JWAC and SCCC is the same if they share a common top tank. The SCCC heat exchanger top tank is only vented to the shared tank in these cases. In order to maintain positive pressure at the pump inlet and prevent air binding of the pump it is important to have a fill line to the pump inlet or cover (see Figure 6-8 and Figure 6-9). In some cases, venting of the pump may also be necessary as determined by the fill and flow tests.

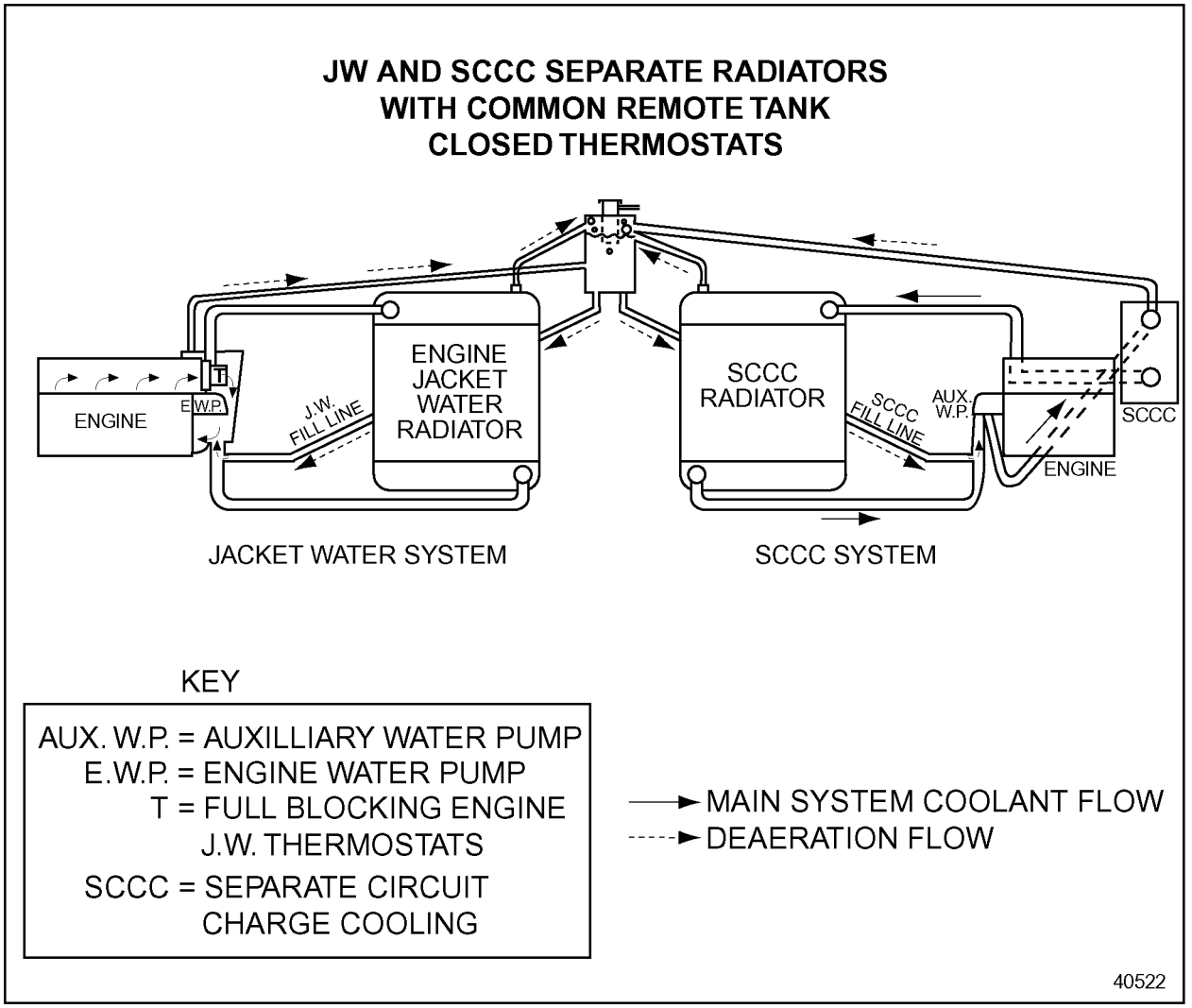

Figure 6-8 JWAC and SCCC Remote Tank — Closed Thermostats

All information subject to change without notice.
7SA2000 0103 Copyright © 2001 DETROIT DIESEL CORPORATION

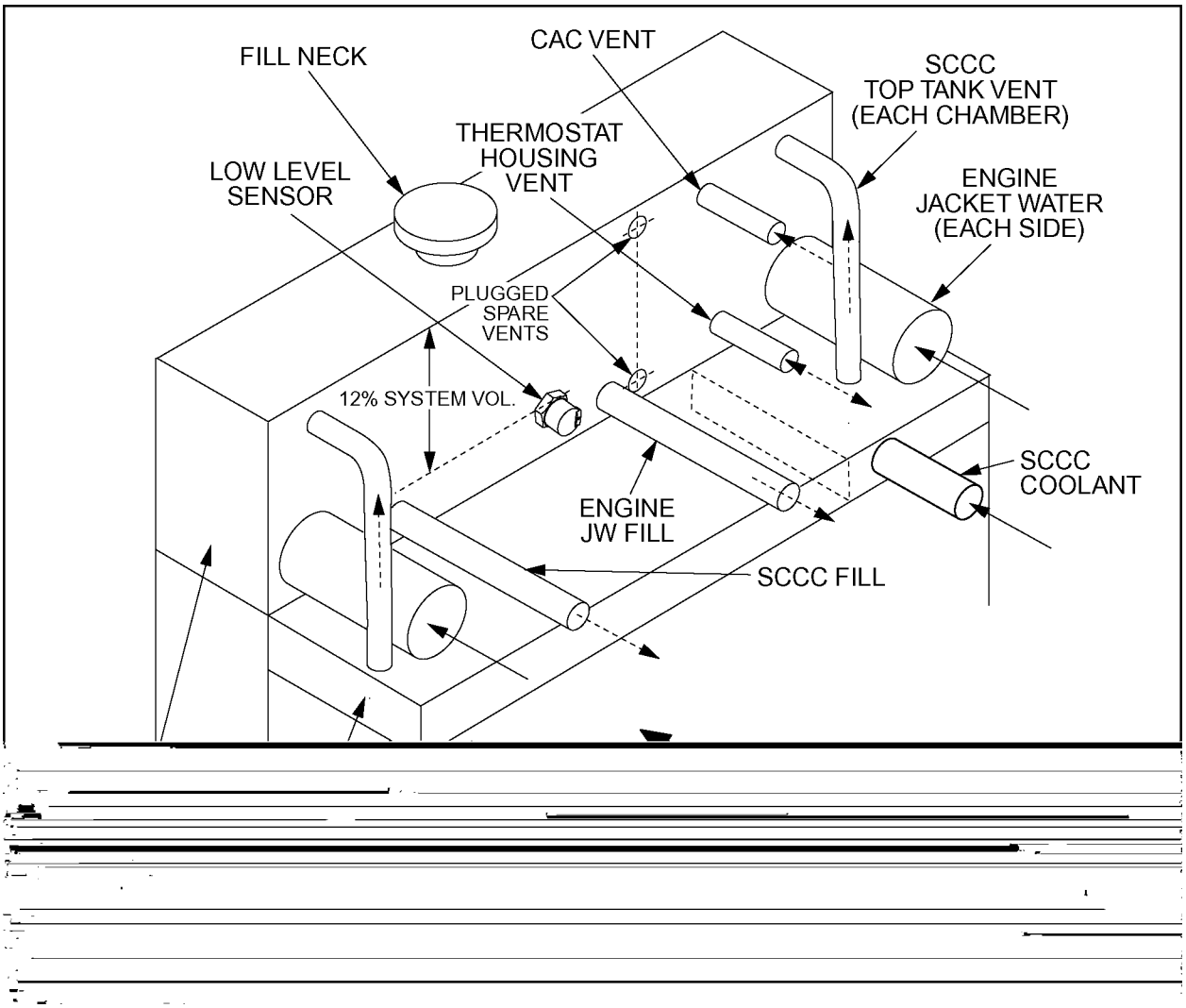

Figure 6-9 SCCC and Engine Jacket Water Cooling with Integral Common Deareation Tank — 3-Pass SCCC Show-

The approximate top tank hose connection sizes for the Series 2000 8, 12, and 16V are listed in Table 6-1

Connection	Nominal Size
Engine JW Out to Radiator	3 in.
Engine JW Fill	1 in.
Engine Thermostat Housing Vent	1/4 in.*
SCCC Coolant (non thermostat)	1 3/4 in.
SCCC with Thermostat	2 1/4 in.*
SCCC Fill	3/4 in.*
CAC Vent	3/16 in.*
* Verify adequate sizing with a fill and dearation test	

Table 6-1 Approximate Top Tank Hose Connections

 Copyright © 2001 DETROIT DIESEL CORPORATION

Basic engine coolant capacity may be found in the Technical Data section (refer to chapter 14). The most current data may be found on the Power Evolution Network (PEN).

6.3.6 DRAWDOWN CAPACITY

Drawdown capacity is the amount of coolant which can be removed from the system at the first sign of aeration or before the coolant pump begins to cavitate. The drawdown capacity for Series 2000 engines is 10% of the total cooling capacity. System design *must* permit reasonable loss of coolant from the full level before aeration of the coolant begins. Additional coolant capacity may be necessary if aeration begins before this point. Drawdown requirements must be met at the maximum tilt angle.

6.3.7 WATER PUMP INLET PRESSURE/MAXIMUM STATIC HEAD

When the engine is operating at maximum rated engine speed, fill cap removed, and thermostat fully opened:

- ☐ The water pump inlet pressure *must not* be lower than atmospheric pressure (suction) with a rapid warm-up cooling system
- ☐ The pressure *must not* exceed 76 mm Hg (3 in. Hg) suction with a conventional system. This design is not recommended.

These requirements *must* be met to minimize water pump cavitation and corresponding loss in coolant flow. Keep restrictions to the water pump inlet such as radiator cores, heat exchanger, auxiliary coolers and the associated plumbing to a minimum.

A 1 bar (96.5 kPa) (14 lb/in.^{2}) operating pressure is recommended for Series 2000 engines. The pressure caps raise the boiling point of the coolant which minimizes coolant or flow rate loss due to localized boiling and water pump cavitation. Higher rated pressure caps may be required for high altitude and severe ambient operation. Cooling system components *must* be able to withstand increased pressure. Refer to *Coolant Selections for Engine Cooling Systems* (7SE298) in Appendix A.

The maximum static head allowed on Series 2000 engines is 15 m H_2O, 150 kPa (50 ft H_2O, 22 lb/in.^{2}) and the pressure relief valve or cap *must* be sized so the limit is not exceeded. Consider a non-pressurized vented cap system for radiators mounted 12m (35 ft) and higher above the engine. This ensures that the limit is not exceeded.

6.3.8 COOLANT FLOW RATE/EXTERNAL PRESSURE DROP

The coolant flow rate through the engine and radiator *must* be within 90% of the rated flow listed in the Technical Data section (refer to chapter14). The most current data may be found on the Power Evolution Network (PEN). Ensure that the flow is maintained when coolant is shunted away from the engine or radiator to supply cab heaters, air compressors, auxiliary coolers, wet exhaust systems, etc.

All information subject to change without notice.
7SA2000 0103 Copyright © 2001 DETROIT DIESEL CORPORATION

The maximum coolant pressure differential external to engine should not exceed 34.5 kPa (5 psi) for the JWAC pump and 69 kPa(10 psi) for the SCCC pump. This includes all piping from engine to radiator, and piping from radiator to engine. Engine and SCCC system coolant pump pressures will be affected by engine RPM, pump inlet restriction, engine and external flow restriction, coolant temperature and viscosity, and pressure cap rating. This will vary with the opening and closing of the thermostats.

6.3.9 MINIMUM COOLANT TEMPERATURE

The overall design of a JWAC system should ensure minimum coolant temperature 71°C (160°F) be maintained under all ambient operating conditions; operating conditions may be found in the Technical Data section (refer to chapter14). The most current data may be found on the Power Evolution Network (PEN). A cold running engine can result in poor engine performance and reduced engine life.

The overall design of an SCCC system should ensure minimum coolant temperature 32°C (90°F) be maintained under all ambient operating conditions; operating conditions may be found in the Technical Data section (refer to chapter14). The most current data may be found on the Power Evolution Network (PEN). A cold running engine can result in poor engine performance and reduced engine life.

6.3.10 COOLANTS

A proper glycol (ethylene, propylene, or extended life organic acid), water, Supplemental Coolant Additive (SCA) mixture meeting DDC requirements is required for year-round usage.

The coolant provides freeze and boil protection and reduces corrosion, sludge formation, and cavitation erosion. Antifreeze concentration should not exceed 67% for ethylene glycol (50% for propylene glycol). Detroit Diesel requires SCAs be added to all cooling systems at initial fill and be maintained at the proper concentration. Follow SCA manufacturers' recommendations.

6.3.11 END PRODUCT QUESTIONNAIRE

A Detroit Diesel End Product Questionnaire (EPQ) *must* be completed on new installations, engine repowers, and installation modifications. A copy of the long and short Detroit Diesel EPQ form can be found in the appendix. Consult Detroit Diesel Application Engineering to determine which form should be used for your engine application.

 Copyright © 2001 DETROIT DIESEL CORPORATION

6.4 COOLING SYSTEM DESIGN CONSIDERATIONS

Many factors *must* be considered when designing the overall cooling system. The design process can be broken down into two phases:

- ☐ Consideration of heat rejection requirements
- ☐ Consideration of specific component design

The following guidelines are presented as a systematic review of cooling system considerations in order to meet minimum standards.

6.4.1 COOLING SYSTEM REQUIREMENTS

The first cooling system consideration is to establish what coolant and air temperature values must be met for an application.

Engine Operating Temperature

Engine coolant temperature, under normal operating conditions, will range from 6°C (10°F) below to 5°C (15°F) above the start to open temperature of the thermostat. The temperature differential between the engine coolant in and out is typically 6°C (10°F) at maximum engine speed and load. A temperature differential around 8°C (14°F) can be anticipated on those applications where torque converter oil cooler heat load is added to the coolant.

The engine coolant temperature rise and radiator coolant temperature drop values will be different whenever the engine and radiator flows are not the same (partial thermostat open operation). Placing auxiliary coolers between the engine and the radiator will cause the same effect. The maximum allowable coolant temperature represents the temperature above which engine damage or shortened engine life can occur.

SCCC Intake Manifold Temperature

Turbocharger air outlet temperature can vary greatly over the wide range of ambient temperatures and altitudes possible for various operating conditions. Regardless of ambient conditions, the Series 2000 engines with SCCC are required to maintain an CAC coolant outlet temperature of no more than 25°C (45°F) above ambient with a maximum limit of 75°C (167°F). The average entering air temperature and altitude of a specific application must be considered when designing a cooling system.

All information subject to change without notice.
7SA2000 0103 Copyright © 2001 DETROIT DIESEL CORPORATION

6.4.2 ENGINE PERFORMANCE

Each engine model at a given power and torque level has its own individual performance values. The two areas of performance which have the greatest effect on cooling system design are heat rejection and water pump output. These values can be found in the Technical Data section (refer to chapter14). The most current data may be found on the Power Evolution Network (PEN).

Engine Heat Rejection

Heat is rejected from an engine into four areas; jacket water, charge air, exhaust and radiation. The jacket water and charge air heat must be dissipated in order to meet coolant and intake manifold rejection requirements. The exhaust heat and radiated heat must be considered because both often have an effect on air temperature which affects fan and heat exchanger performance

Coolant Pump Flow

The pump flow in the Technical Data section (refer to chapter 14) is derived from a laboratory engine operating under SAE J1995 conditions. Actual engine installations often have substantially different plumbing arrangements and employ different coolants. Refer to section 6.4.4 for information about water pump performance.

Heat Transfer Capabilities

Heat transfer capabilities *must* be adequate for the designated coolant, air temperatures, and flows. These capabilities should include reserve capacity to allow for cooling system deterioration.

 Copyright © 2001 DETROIT DIESEL CORPORATION

6.4.3 ENVIRONMENTAL AND OPERATING CONDITIONS

Consider both environmental and operating modes of the installation when designing the cooling system. Reserve capacity and special selection of components are required for operation in the following extremes:

- ☐ Hot or cold ambient temperatures
- ☐ High altitude
- ☐ Space constraints
- ☐ Noise limits
- ☐ Tilt operation or installations
- ☐ Arid, damp, dusty, oily, windy conditions
- ☐ Long-term idle, full load, peak torque operation
- ☐ Long-term storage or standby operation
- ☐ Indoor/outdoor operation
- ☐ Serviceability limitations
- ☐ Infrequent maintenance intervals
- ☐ Severe shock or vibration
- ☐ System deterioration
- ☐ Multiple engine installations

The heat rejected to the coolant generally increases when engine performance is reduced due to external conditions. Engine performance is adversely affected by:

- ☐ High air restrictions
- ☐ High exhaust back pressure
- ☐ High air inlet temperature
- ☐ Altitude

Ambient

Operating in extremely cold ambient, at light loads, or during extended idling will require conservation of heat energy. Coolant temperatures *must* be maintained near the thermostat opening value. This controls engine oil temperature and combustion air temperature (if SCCC thermostats are installed) at a satisfactory level for good engine performance and reliability. Cab heater performance is adversely affected if coolant temperatures are not maintained.

All information subject to change without notice.
7SA2000 0103 Copyright © 2001 DETROIT DIESEL CORPORATION

Altitude

As altitude increases air density decreases, and reduces engine and cooling system performance. A 1°C (2°F) penalty in the ambient capability is encountered per 305 m (1000 ft) increase in altitude as a general rule.

The reduced atmospheric pressure will lower the boiling point of the coolant. A higher rated pressure cap/relief valve may be required to suppress boiling.

Space Constraints

Cooling system design is often influenced by space constraints. Heat exchanger height, width, and depth can be dictated by the application. This, in turn, limits fan diameter and heat exchanger surface area.

Enclosures

Enclosed power units and vehicle underhood enclosures cause many adverse effects on cooling such as:

- ☐ Heat build up
- ☐ Fan air flow restriction
- ☐ Hot air recirculation
- ☐ Radiator core oil film and dirt build up

This produces the equivalent effect of operating in a high ambient. For example, an enclosed generator power unit with a blower type fan will pick up heat from the generator, the exhaust system piping, and the engine block as the air travels to the fan intake. The air going to the radiator could be 20°F — 40°F higher than the ambient. On a 90°F day, the cooling system has to function as though it was 130°F ambient.

It is important to consider all these adverse effects and design the system to maximize the ability to get cooler ambient air to the radiator inlet. It is also important to size the core and fan properly to account for temperature rise.

Suction fans cause a pressure build up under the hood. This causes the hot air that has already been through the radiator core to find paths to escape. Sometimes the air finds it easier to escape to the front of the radiator where there is a suction drawing it there. This recirculating air can be 25°F — 50°F higher than the ambient air, mix with it, and create a higher average air to the radiator. It is therefore very important to seal off recirculation paths where possible and baffle discharge air aft and away from the radiator inlet. Minimizing the restriction caused by panel louvers and other escape paths must be part of the installation design consideration.

Vehicle motion and ground effects also influence the average air temperature that can get to the radiator. Designing for the maximum ambient plus some anticipated air temperature rise must always be considered.

 Copyright © 2001 DETROIT DIESEL CORPORATION

Noise Limits

Noise limitations are another environmental concern which can effect the cooling system. Operating location and/or government regulations can limit noise generated by a cooling fan. Fan noise is directly related to fan speed which effects air flow (refer to section 6.4.6).

Tilt Operations or Installations

Cooling systems *must* perform satisfactorily at maximum tilt operation. This is especially critical for applications where the engine *must* operate for extended periods on steep grades.

6.4.4 SYSTEM COMPONENTS

Total heat rejected to the coolant and air must be determined to properly size the radiator and fan arrangement so sufficient heat can be dissipated. This allows the thermostat to control the coolant temperature at an optimum operating level. This information is listed the Technical Data section (refer to chapter14). The most current data may be found on the Power Evolution Network (PEN).

Additional Heat Loads to Coolant

The following items will add an additional heat load to the engine coolant:

- ☐ Transmission coolers
- ☐ Torque converters
- ☐ Hydraulic oil coolers
- ☐ Air compressors
- ☐ Retarders
- ☐ Brake coolers

Additional Heat Loads to Air

The following factors or components will raise the temperature of the radiator inlet air or increase restriction to air flow when selecting a radiator and fan:

- ☐ Air-to-air coolers
- ☐ Oil-to-air coolers
- ☐ Fuel-to-air coolers
- ☐ Hydraulic coolers
- ☐ Transmission coolers
- ☐ Recirculated engine compartment air
- ☐ Engine radiated heat (blower fans)
- ☐ Air conditioning condenser
- ☐ Engine compartment configuration

All information subject to change without notice.
7SA2000 0103 Copyright © 2001 DETROIT DIESEL CORPORATION

The highest single source heat load to the coolant generally occurs during the no fuel braking mode in applications that use retarders. The amount of heat generated from a retarder is dependent upon its frequency and duration of application. The heat load source is from the retarder oil cooler, but engine friction heat also exists. The cooling system *must* be able to control maximum engine coolant temperature regardless of the mode of operation.

Coolant Type

The type of coolant chosen for a cooling system can have an effect on the system performance. Water pump output and heat transfer characteristics are different for water than for antifreeze because the fluids have different densities, viscosities and thermal conductivity. The heat exchanger manufacturer is the best source for determining what the difference in performance would be from one type of coolant to the next.

Plumbing

Consider the following requirements for all water connections made between the engine and the radiator, deaeration tank, heaters, filters, etc.:

- ☐ All connections *must* be as direct as possible, durable, and require minimal maintenance.
- ☐ Pipe and hose connections *must not* be necked down or be smaller than the engine inlet(s) and outlet(s). Fitting size *must* be considered so minimum hose inside diameter requirements are not exceeded.
- ☐ The number of connections *must* be kept to a minimum to reduce potential leakage.
- ☐ Bends should be smooth and have a generous radius. Avoid mitered bends.
- ☐ Beaded pipe ends *must* be used to prevent the hose from separating from the pipe. Consider coolant flow and the force imposed on the joint as well as coolant pressure.
- ☐ Fittings on the lines (especially fill line) *must not* reduce effective size.
- ☐ Quality constant tension hose clamps *must* be used to maintain tension and prevent leakage during both cold and hot operation. Use the correct style of clamp when silicone hoses are used.
- ☐ Two clamps should be used at each connection, indexed 180° apart. See Figure 6-12.

 Copyright © 2001 DETROIT DIESEL CORPORATION

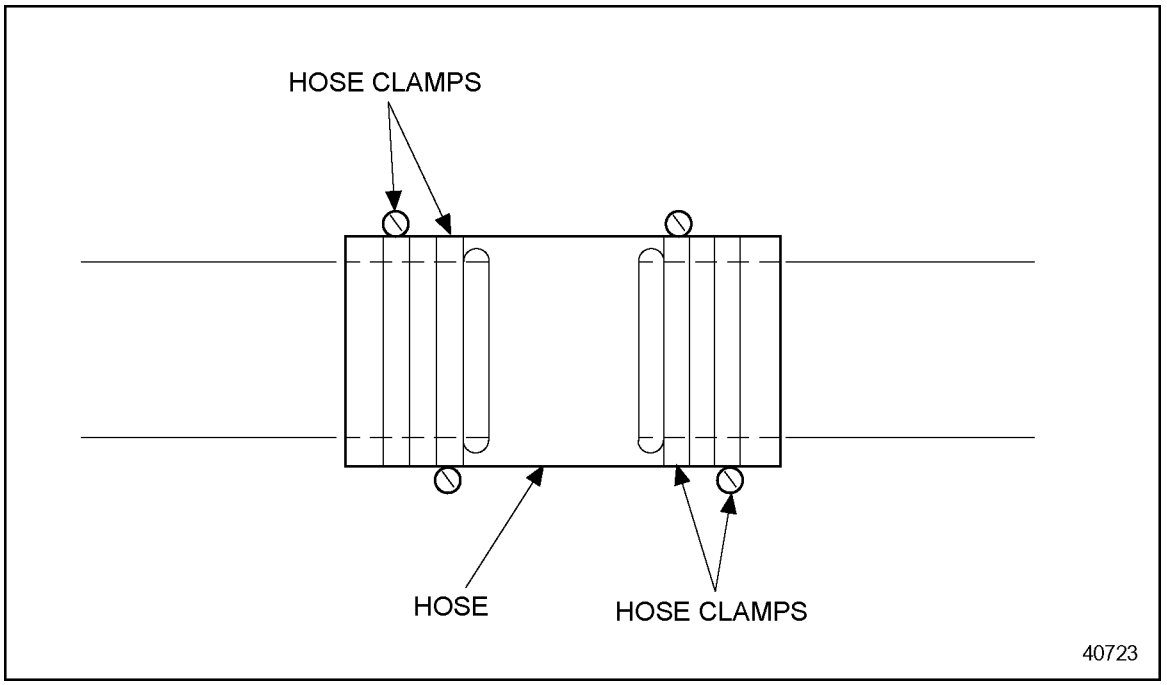

Figure 6-12 Hose Clamp 180° Indexed Position

- ☐ Connections *must* be flexible enough to accommodate relative motion between connecting components.
- ☐ Quality hoses that can withstand the expected temperatures, pressures, coolants, and inhibitors *must* be used.
- ☐ Hoses must be fuel and oil resistant.
- ☐ Hoses should not span more than a 5 cm (2 in.) unsupported section. Use reinforced hose for longer spans.
- ☐ All connecting hoses and pipes *must* provide adequate support to prevent collapse and rupture.
- ☐ All lines *must* have a continuous downward slope without droops to ensure good cooling system draining and refilling capabilities. Additional drains and vents may be required if this is not possible.

All information subject to change without notice.
7SA2000 0103 Copyright © 2001 DETROIT DIESEL CORPORATION

Auxiliary Coolant Flow Path Circuitry

Consider the following when using add on components such as cab heater systems, air compressors, auxiliary oil coolers, retarders, etc.:

- ☐ Location of coolant supply and return connection points.
- ☐ Restriction to coolant flow. Select engine connection points that will give adequate flow under all operating conditions, but do not adversely affect main engine/radiator flow.
- ☐ Location of auxiliary components. Components should be mounted below the top tank or surge tank coolant level whenever possible. This will allow removal of trapped air and to help complete filling of the cooling system.
- ☐ Special vents which may be required to ensure excessive air can be purged during system fill, if components are mounted above the coolant level. The engine *must* be run after the system has been filled to purge any remaining trapped air. Add makeup coolant as required.

Specific considerations are as follows:

- ☐ Connect auxiliary oil coolers and retarder heat exchangers in series with the main coolant flow on the pressure side of the pump. Cab and passenger compartment heater connections are parallel. Coolers located on the inlet side of the water pump require modifications to the engine water bypass circuit to provide coolant flow through the cooler during closed thermostat operation. Modifications *must not* hinder air from being purged from the water pump. Engine coolant warm-up problems may occur when coolers are located in the radiator bottom tank. Connect the heater supply at the water pump discharge and the return to the thermostat housing base. See the installation drawings for specific locations.
- ☐ Give special care to excessively cold ambient operating conditions.
- ☐ Enhance driver/passenger comfort through the use of highly efficient, low restriction heater cores. Highly efficient, modern engines reject less heat to the coolant. It may be necessary to increase idle speed to maintain coolant temperatures.

Water Cooled Exhaust Systems

Consult an authorized distributor or DDC Application Engineering when water cooled exhaust systems are being considered.

Water Pumps

A water pump is used to circulate the coolant throughout the cooling system, including customer add-on features such as cab heaters, filters, and auxiliary oil coolers. Pumps are sensitive to inlet restrictions, coolant temperature, coolant type and aerated coolant. Discharge flow can be seriously reduced and damaging cavitation can occur if the cooling system is not designed properly and if the pump is highly restricted at the suction.

 Copyright © 2001 DETROIT DIESEL CORPORATION

Water pump inlet restriction *must* be kept to a minimum to prevent cavitation. This means radiators, auxiliary oil coolers located between the radiator and the pump inlet (not preferred location), as well as the associated plumbing *must* introduce minimal restriction. Lines connected to the water pump inlet *must* have at least the same area as the pump inlet. Bends should be kept to a minimum and they should have a generous radius (no mitered bends). The water pump inlet pressure (suction) *must not* exceed allowable limits. The lowest pressure in the entire cooling system is found at the water pump inlet. This pressure can be well below atmospheric; thus cavitation (boiling) will occur below 100°C (212°F) at sea level. Altitude causes higher probability of cavitation in a non-pressurized system.

The pump can easily become air bound if a large volume of air is trapped in the pump during coolant filling, or if air is fed to the pump when the pump is running. Vehicle heater systems can be a major source of air. Air can also be introduced into the cooling system from a severely agitated or improperly designed top tank.

6.4.5 HEAT EXCHANGER SELECTION

Heat exchanger cores are available in a wide variety of configurations. Heat exchanger materials, construction and design can be any of the materials and designs listed in Table 6-2.

Materials, Construction, and Design	Choices
Heat Exchanger Materials	Copper, Brass, Aluminum, Steel
Heat Exchanger Construction	Lead Soldered, No Lead Soldered, Brazed, Welded, Mechanical Bond
Fin Geometry	Plate, Serpentine, Square, Louvered, Non Louvered
Tube Geometry	Oval, Round, Internally Finned, Turbulated
Coolant Flow	Down Flow, Cross Flow, Multiple Pass Series Flow, Multiple Pass Counter Flow

Table 6-2 Heat Exchanger Materials, Construction, and Design Choices

All of these variations can have an effect on heat exchanger size, performance and resistance to flow on both the fin side and tube side.

Meet the following design criteria to achieve greatest efficiency:

- ☐ Utilize the largest practical frontal area in order to minimize restriction to air flow.
- ☐ Use square cores. The square core allows maximum fan sweep area, thus providing most effective fan performance.
- ☐ Keep core thickness and fin density (fins per unit length) to a minimum. This keeps air flow restriction low, helps prevent plugging, and promotes easier core cleaning.
- ☐ Use the largest possible fan diameter to permit operating at slower fan speeds, resulting in lower noise and horsepower demand.

All information subject to change without notice.
7SA2000 0103 Copyright © 2001 DETROIT DIESEL CORPORATION

Core Construction Requirements

Tube and plate fin design is preferred because of lower restriction to both air and coolant flow. Tube and plate fin designs are easier to clean than louvered serpentine types and generally of more rugged construction making it more suitable to operate in the diesel engine environment.

There are three methods of securing the radiator tubes to the header plate:

- ☐ With rubber grommets
- ☐ Roller swage mechanical bonding
- ☐ Soldering and brazing.

The rubber grommet and mechanical bonding methods are often more expensive but are considered to be more durable than soldering and brazing. These methods are used more for heavy-duty applications where vibration, shock loading, and deformation take place. The grommet type is especially suitable for heavy-duty applications where there is a lot of transient loading which induces thermal-cycling. Mechanical or grommet bond is required in railroad applications that are subject to shock loading when trains are humped and spiking due to track joints.

The application and duty cycle should be examined for conditions that might require the heavy-duty type construction. For example, a stationary power unit or generator not subject to the conditions experienced on a moving vehicle such as a log skidder or earth mover might get by with a less expensive soldered core radiator. Any radiators greater than 5 ft by 5 ft should have the heavy-duty type bonding. It is always best to consult the radiator manufacture and supplier for advice.

A high number of fins per inch helps improve cooling efficiency due to the greater surface area but too many fins per inch increases restriction to fan air flow which reduces the cooling effect. One in.H_2O of restriction is ideal but 2 in.H_2O would be acceptable. Three in.H_2O would be on the high side so more core area should be considered.

If the application is in a dusty, debris like atmosphere such as agricultural, forestry or tub grinder equipment, and 8–10 fins per inch density accompanied by inline tubes would be more suitable.

 Copyright © 2001 DETROIT DIESEL CORPORATION

6.4.6 FAN SYSTEM RECOMMENDATIONS AND FAN SELECTION

Proper selection and matching of the fan and radiator as well as careful positioning will maximize system efficiency and will promote adequate cooling at the lowest possible parasitic horsepower and noise level. Obtain radiator and fan performance curves from the manufacturer to estimate air system static pressure drop and determine if a satisfactory match is possible.

Installations using the largest fan diameter possible, turning at the lowest speed to deliver the desired air flow, are the most economical.

NOTE:
Fan blades should not extend beyond the radiator core. Blades that reach beyond the core are of minimal or no benefit.

Other important considerations include:

- ☐ Cooling air flow required by the radiator core
- ☐ Cooling air system total pressure drop
- ☐ Space available
- ☐ Noise level limit
- ☐ Fan drive limits
- ☐ Fan speed limit
- ☐ Fan weight and support capabilities
- ☐ Fan spacers

All information subject to change without notice.
7SA2000 0103 Copyright © 2001 DETROIT DIESEL CORPORATION

Blower vs. Suction Fans

The application will generally dictate the type of fan to be used (i.e. vehicles normally use a suction fan, and stationary units frequently use blower fans). Blower fans are generally more efficient in terms of power expended for a given mass flow, since they will always operate with lower temperature air as compared to a suction fan. Air entering a suction fan is heated as it passes through the radiator where a blower fan, even when engine mounted, will receive air closer to ambient temperatures.

Proper fan spacing from the core and good shroud design are required, so air flow is completely distributed across the core to obtain high efficiency.

A suction fan, when mounted, will generally have the concave side of the blade facing the engine, whereas a blower fan will have the concave side facing the radiator; see Figure 6-13. A suction fan cannot be made into a blower fan by simply mounting the fan backwards. Fan rotation *must* also be correct.

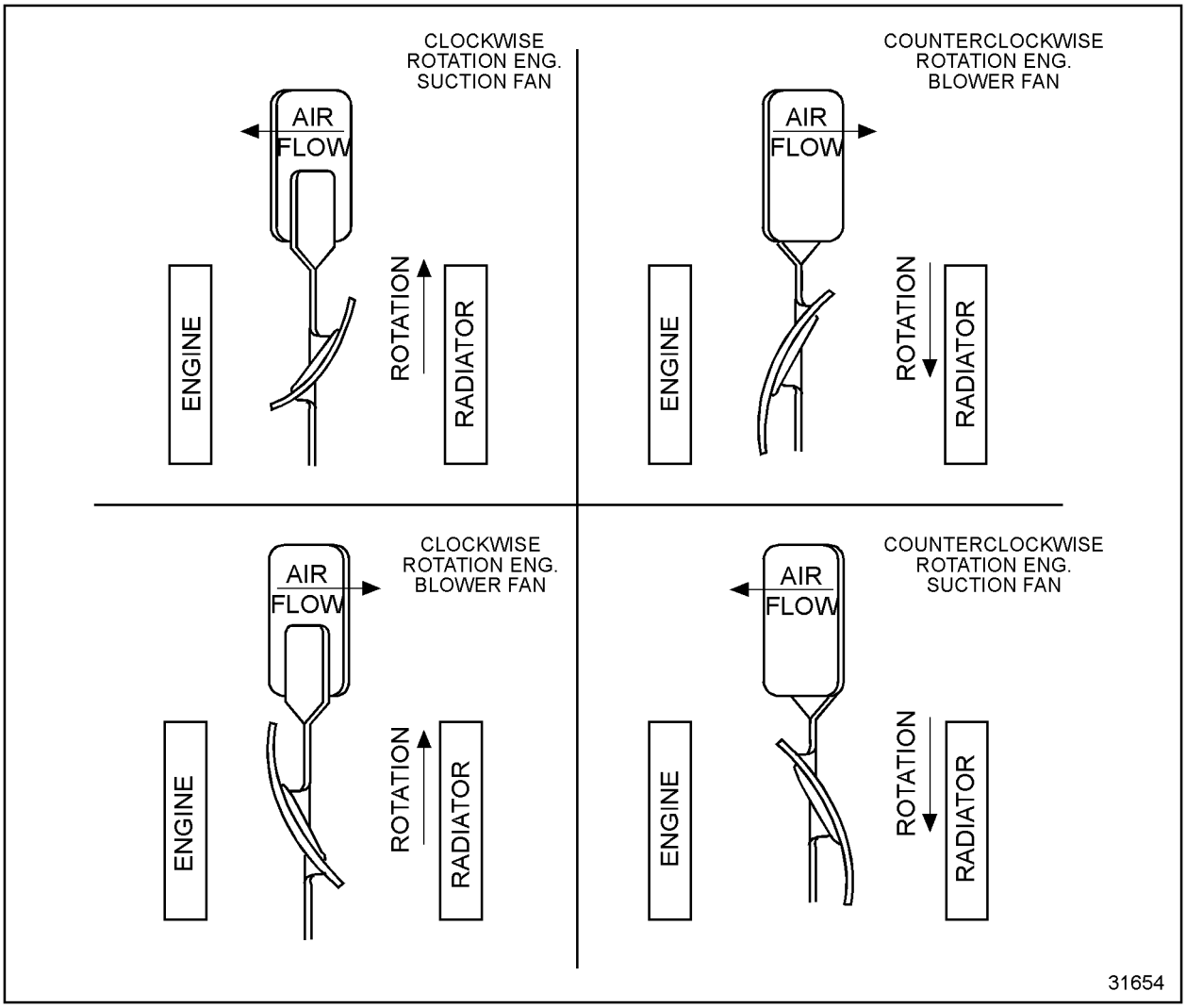

Figure 6-13 Blower vs. Suction Fans

 Copyright © 2001 DETROIT DIESEL CORPORATION

Fan Performance

Fan curve air flow (m^3/min [ft^3/min]) is a theoretical output value which is seldom achieved. This value can be approached with a well formed, tight fitting shroud and proper fan positioning (fan tip clearances of 1.59 mm [1/16 in.] or less). Consult the fan supplier on how to determine what the realistic fan air flow delivery will be on the installation.

Select a fan/core match with sufficient reserve cooling capacity to allow for some degradation. This degradation occurs as the unit gets older and there is fouling from airborne debris. These conditions cause higher air restriction and/or lower heat transfer capability. This is especially true for applications such as agriculture, earth moving, or mining. Fin density should be as low as practical to keep air flow high, minimize plugging, and permit easier cleaning. Typical fin spacing for construction and industrial applications is six to eight fins per inch. Increasing core thickness increases the restriction to air flow. This condition causes fouling to occur faster.

Consider the following when analyzing fan performance:

- Speed
  - Typical maximum fan speed for a quite application is 5,000 ft per minute tip speed
  - Typical maximum fan speed for an industrial application is 18,000 ft per minute tip speed
- Static Pressure
- Horsepower

The following fan law relationships are useful when interpreting basic fan curves:

- Air flow varies directly with fan speed
  $ft^3/min_2 = (ft^3/min_1) \times (r/min_2) / (r/min_1)$
- Static head varies with fan speed^2
  $P_{S2} = (P_{S1}) \times [(r/min_2) / (r/min_1)]^2$
- Horsepower varies with fan speed^3
  $hp_2 = (hp_1) \times [(r/min_2) / (r/min_1)]^3$

Additional factors that affect the installed performance of a fan are listed in Table 6-3.

Installed Fan	Factors Affecting Performance
Fan Position	Fan to Core Distance, Fan to Engine Distance
Air Flow Restriction	Radiator Core, Engine and Engine Compartment Configuration, Grills and Bumpers, Air Conditioning Condenser, Air-to-Oil Cooler, Air-to-Air Cores
Shroud	Shroud-to-Fan Tip Clearance, Shroud-to-Fan Position, Shroud Type(i.e. Ring, Box, Venturi), Shroud-to-Core Seal, Shutters, Bug Screens, and Winterfronts

Table 6-3 Installed Fan Performance Factors

The parasitic horsepower penalty of high air side static pressure is shown on a typical fan performance curve in Figure 6-14.

All information subject to change without notice.
7SA2000 0103 Copyright © 2001 DETROIT DIESEL CORPORATION

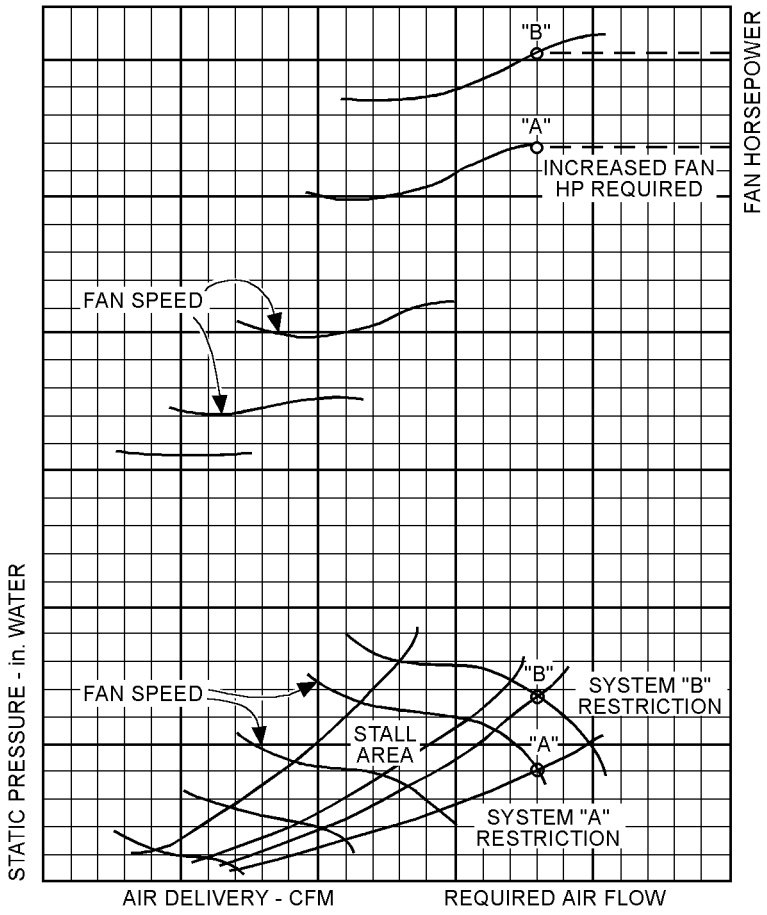

Figure 6-14 Fan Performance Curve

NOTICE:
The fan should never operate in the stall area, where a small change in static pressure results in no change in airflow.

NOTICE:
The air side of the cooling system is critical and a change in the air flow will have a greater impact on cooling than a similar percentage change in coolant flow.

Consider these additional factors to determine actual fan performance at worst case operating conditions.

- ☐ Air temperature
- ☐ Atmospheric pressure

 Copyright © 2001 DETROIT DIESEL CORPORATION

Fan Position

Fan position relative to the radiator depends on the fan diameter and the radiator frontal area. Maintain a minimum 51 to 102 mm (2.0 to 4.0 in). fan-to-core distance. Position the fan further away from the core as the fan swept area becomes less than the radiator frontal area. This allows the air to spread over the full core area. The fan will not spread air over the entire core area if it is mounted too close to the radiator.

The optimum position of the fan blade on a blower or suction fan with respect to the shroud opening is dependent on the fan design as well as the many variables associated with an installation. Different system performance may occur for the same fan positions in different applications due to air flow restriction and flow obstructions. Consult the fan manufacturer for assistance in optimum fan positioning.

Keep fan tip-to-shroud clearance to a minimum because it influences air flow and noise level significantly. Minimum clearance is achieved by using a shroud with a round opening. An adjustable fan shroud is recommended if the fan pulley is adjustable for belt tightening. Consider allowances for engine/radiator movement when determining tip clearance.

Consider components located behind the fan so air flow is not adversely affected or vibration introduced to the fan. These conditions will cause premature failures, or increased noise, or both.

All information subject to change without notice.
7SA2000 0103 Copyright © 2001 DETROIT DIESEL CORPORATION

Fan Shrouds

The use of a fan shroud is required for achieving good cooling system performance. A properly designed shroud will distribute the air across the core more uniformly, increase core air flow, and prevent air recirculation around the fan. Seal holes and seams in the shroud. An air tight seal between the shroud and the radiator core will maximize air flow through the core.

There are three basic types of shrouds: the well rounded entrance venturi shroud, the ring shroud, and the box shroud; see Figure 6-15. The ring and box type shrouds are most common because they are easier to fabricate.

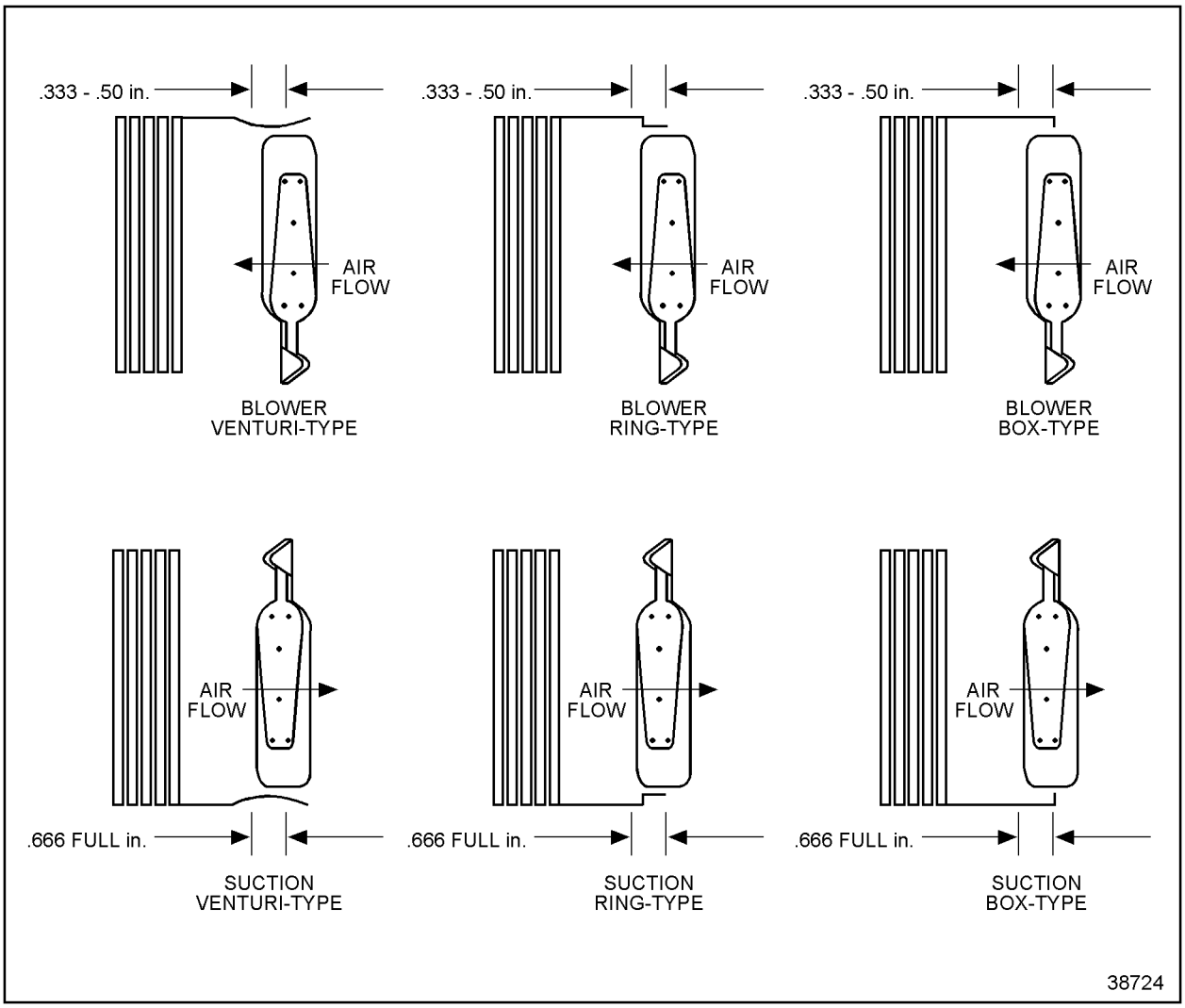

Figure 6-15 Fan Shroud Types

 Copyright © 2001 DETROIT DIESEL CORPORATION

Fan System Assemblies

Do not exceed the design limits of any component when OEM components such as fans, fan drives, spacers, etc. are attached to Detroit Diesel supplied components (fan hub and pulley assemblies). Vibration tests must be performed when the customer wants to use a fan system not previously approved by DDC.

Fan Drives

The Series 2000 fan drive specifications are listed in Table 6-4.

Component/Degree	Specification
Crankshaft Pulley Diameter	302.6 mm (11.90 in.)
Fan Height Range	422 to 544 mm (16.6 to 21.4 in.)
Fan Drive Ratios	1.06:1, .86:1, .80:1
Fan Belt Type	10 V Poly Vee
Maximum Belt Tension (Crankshaft Load)	2224 N/side (500 lb/side)
Maximum Static Tension (Crankshaft Power)	48.5 kw (65 hp)
Maximum Fan Spacer	76.2 mm (3.0 in.)
Maximum Allowable Radial and Axial T.I.R.	.305 mm (.012 in.)
Fan Support Bearing Type	Double Tapered Roller (Medium)

Table 6-4 Fan Drive Specifications

There are two fan drives available:

- ☐ Fixed fan drive
- ☐ Clutched fan drive

Clutched fan drives have temperature sensors which control fan operation to regulate coolant and charge air temperature.

Air Recirculation Baffles

Use baffles around the perimeter of the radiator assembly to prevent hot air which has passed through the radiator core from being recirculated back through the core. The cooling capability of the system may be seriously hindered if this baffling is not utilized.

6.4.7 RADIATOR COMPONENT DESIGN

The design of individual radiator components may have an effect on cooling system performance. Consult the radiator manufacturer for the best design for your application.

6.4.8 COOLANT HEATERS

Information on coolant heaters can be obtained from the Detroit Diesel Application Engineering.

All information subject to change without notice.
7SA2000 0103 Copyright © 2001 DETROIT DIESEL CORPORATION

6.4.9 MULTI-DUTY CYCLE

Cooling systems *must* perform satisfactorily under all operating modes. Consideration *must* be given when an engine is used for prime power under several duty cycles such as cranes, drill/pumping rigs, etc.

6.4.10 OTHER CONSIDERATIONS

Cooling system performance *must* be reevaluated any time engine, cooling system, vehicle components, timing, etc., are changed due to potential increased heat load or reduced cooling system capacity. Conduct a reevaluation of the cooling system if load, duty cycle, or environmental operating conditions are different than originally approved.

6.5 COOLING SYSTEM EVALUATION TESTS

Cooling tests *must* be conducted on all new installations and engine repowers. The same test *must* be conducted whenever modifications have been made to the engine or cooling system as well as changes in load, duty cycle, or environmental operating conditions. This will verify that the cooling system will perform satisfactorily in the installation by having adequate heat dissipation capability and coolant flow.

A thorough evaluation will require:

- ☐ Complete description and documentation of the system
- ☐ Adequate instrumentation
- ☐ Proper test preparations
- ☐ Accurate tests
- ☐ Data analysis and documentation
- ☐ Diagnostics (troubleshooting)
- ☐ Corrective action (if necessary)

6.5.1 SYSTEM DESCRIPTION

A complete system *must* be documented in the Detroit Diesel End Product Questionnaire (EPQ) form. Attach cooling system component prints, installation drawings, photographs, and sketches of the overall system to the EPQ.

This information will assist in determining system approval and also serve as a reference point if future difficulties are encountered.

 Copyright © 2001 DETROIT DIESEL CORPORATION

6.5.2 INSTRUMENTATION

The following instrumentation and materials are required to conduct a complete evaluation of the cooling system:

- ☐ Thermocouples and associated readout equipment
- ☐ Pressure gauges and associated hoses and fittings
- ☐ Thermostat
- ☐ Stop watch
- ☐ Light (flashlight, trouble light)
- ☐ Water supply hose
- ☐ Diagnostic data reader or Detroit Diesel Diagnostic Link™ software
- ☐ Engine loading method
- ☐ Tape measure
- ☐ Flowmeters and associated hardware (if necessary)

NOTE:
All instrumentation *must* be calibrated and in good working condition. Size and range should maintain data accuracy.

Thermocouples and Associated Hardware

This section discusses the attributes needed for coolant, air and oil in relation to thermocouples and associated equipment.

Measure air, engine coolant out, and lube oil gallery temperatures until the coolant and engine lube oil temperatures are fully stabilized. Other temperature measurements such as engine coolant in, engine intake air, and exhaust temperatures may be measured to aid in trouble shooting cooling system deficiencies.

All thermocouples, wires, and readout equipment *must* be compatible. All junction points should have wire insulation completely removed, cleaned, and securely joined for good electrical continuity. Polarity *must* also be correct.

Use calibrated matched pairs to obtain accurate temperature differential values.

A digital readout is preferred and should have 12V (DC) and 110V (60~AC) capability. A remote multi-channel switch can be wired into the circuit if the readout box does not have sufficient positions for all the thermocouples.

Location of the thermocouples is critical. The thermocouples *must* protrude into a high flow path and not touch surrounding surfaces. Ambient air thermocouples *must* be shielded from direct sunlight and not sense any radiated or recirculated heat sources. Radiator thermocouples *must* also be shielded from sunlight. The sump thermocouple *must* be in the oil while the engine is running.

All information subject to change without notice.
7SA2000 0103 Copyright © 2001 DETROIT DIESEL CORPORATION

Pressure Gauges and Associated Hardware

To measure water pump inlet pressure use a 381 mm Hg to +206.8 kPa (15 in. Hg to +30 lb/in.[2)] compound gauge or 76.2 cm (30 in). “U" type manometer.

Additional pressure measurements may be required for analysis of the system.

Use a vent at each gauge to expel all entrained air and water and ensure no blockage in the circuit.

All hoses *must* be full of the substance being measured.

NOTE:
Locating gauges at the same height as the measurement point eliminates the need to correct the readings.

Hose length should be as short as is practical.

Thermostats

Both blocked open and operating thermostats are required. A thermostat *must* be blocked open to the proper dimension for obtaining correct data. Full blocking thermostats *must* be opened so the coolant bypass circuit is completely shut off. Make a visual check. The oil cooler bypass thermostat *must* be blocked to the minimum travel distance at full open temperature (see Figure 6-16). Inspect and replace thermostat seals if necessary.

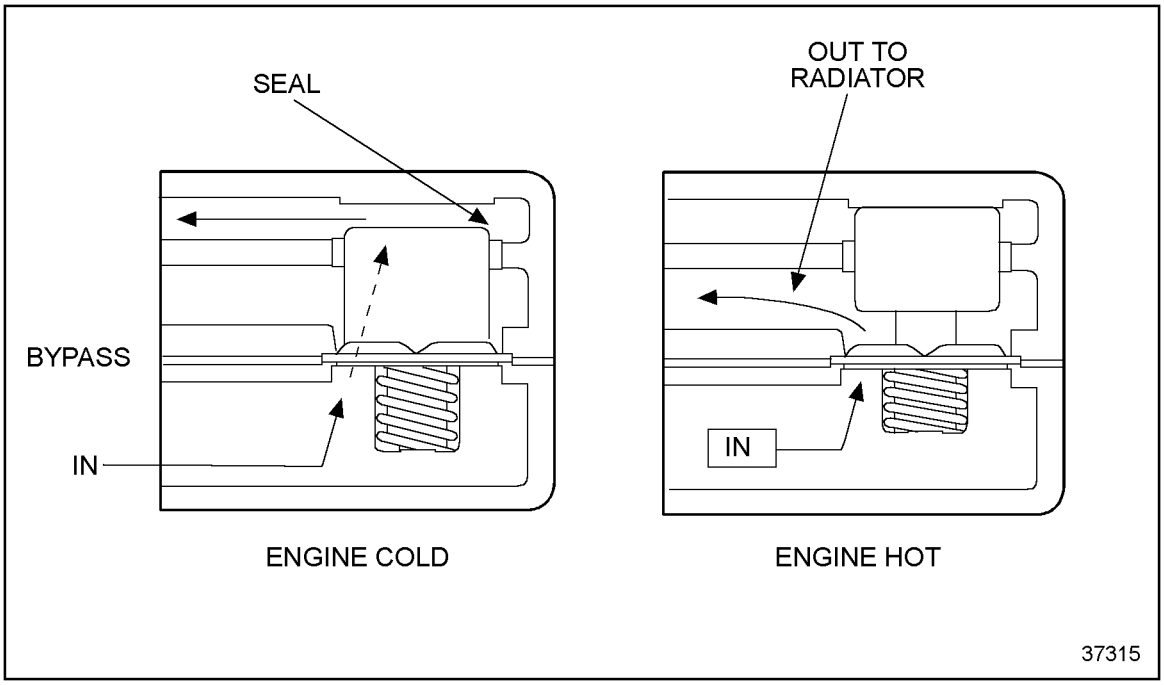

Figure 6-16 Full Blocking Thermostat (Top Bypass)

 Copyright © 2001 DETROIT DIESEL CORPORATION

Sight Glass and Transparent Tubing

Observation of coolant aeration, flow direction, and velocity greatly assists in analyzing test results and determining system acceptability.

CAUTION:

To avoid injury from scalding, thick wall transparent tubing with an appropriate temperature rating must be used. Safety straps must be used with the sight glass and flow meters.

NOTICE:

All connections must be secured carefully and be routed so they do not kink and will not be damaged during testing.

Install a sight glass in the engine water out line between thermostat housing and radiator inlet.

Replace deaeration and fill lines with transparent tubing. It is also helpful to replace coolant return lines on heater, air compressor, filter, coolant conditioner, and other components that use engine coolant.

Sight glass and transparent tubing is useful during fill, drain, capacity check, deaeration, flow and pressure vs. engine speed maps, and drawdown tests. These visual aids should be removed for safety reasons prior to air handling, cooling index, and any other tests where the system is pressurized and high coolant temperatures are expected.

Graduated Container

An 12 L (3 gal) bucket, graduated in 1 L (1 qt) increments is recommended for most cooling systems.

The container is needed to determine total cooling system capacity, measure coolant removed during drawdown test, and coolant expelled during air handling test, and measuring water supply flow rate for fill test.

Pressure Cap

The pressure relief cap/valve *must* be functional and develop rated pressure.

Stop Watch

A stop watch is used in conjunction with a graduated bucket to set flow rate for fill test and to record time to expel all entrained air after filling the system (deaeration time).

All information subject to change without notice.
7SA2000 0103 Copyright © 2001 DETROIT DIESEL CORPORATION

Light

A flashlight or trouble light held against the sight glass or transparent tubing is helpful in observing coolant aeration. A light is also useful to look for top tank coolant agitation.

Water Supply and Hose

A water supply and hose capable of flowing at minimum 11.35 L/min (3 gal/min) should be available to conduct continuous and interrupted fill tests. A flow meter that can regulate rate and measure capacity is ideal.

Normally a stop watch, graduated bucket, and a valve on the hose are needed to regulate water flow to the required fill rate.

Engine Loading Method

The test facility should provide a method for fully loading the engine, in order to conduct cooling index tests. The loading method will vary with application and test site location.

Tape Measure

Size and distance measurements of radiator assembly, fan components, and other related hardware are required to complete cooling system evaluation.

Flowmeters and Associated Hardware

Engine coolant out (radiator in) is the preferred location for measuring radiator flow. Inside diameter of flowmeters *must not* cause excessive restriction. Use engine coolant in (radiator out), only as a last resort because of added inlet restriction to the water pump.

The flowmeter should offer low restriction to the coolant flow, regardless of the type used (turbine, differential pressure, etc.). Refer to the manufacturers instructions for correct installation, operation, and limitations of the individual flowmeter.

6.5.3 TEST PREPARATIONS

The following preparations are necessary before conducting the cooling system tests:

1. Confirm all instrumentation and equipment is in good working condition and calibrated.
2. Know how to use and operate all equipment.
3. Understand overall cooling system circuitry and operation, test procedures, and data analysis.
4. Obtain all available information on the specific cooling system to be evaluated such as radiator/top tank assembly print, fan/fan drive, shrouds, circuitry, etc. prior to conducting tests.

 Copyright © 2001 DETROIT DIESEL CORPORATION

CAUTION:

To avoid injury from the expulsion of hot coolant, never remove the cooling system pressure cap while the engine is at operating temperature. Remove the cap slowly to relieve pressure. Wear adequate protective clothing (face shield or safety goggles, rubber gloves, apron, and boots).

5. Be sure the test unit represents the final complete package to be released.
6. Check coolant concentration and take sample for possible analysis.
7. Drain entire cooling system completely. This may require removing hoses and even blowing air through coolant passages.
8. Flush cooling system with water to remove all residual antifreeze solution. Flush system with a reputable cleaner if it is contaminated.
9. Install instrumentation, sight glass, and transparent tubing.
10. Disarm high temperature and low coolant shutdown devices for these tests. Shutdown and alarm settings should be determined.
11. Modify shutter controls, fan controls, and transmissions, if necessary to perform certain tests correctly.
12. Know cooling system requirements (specifications) for the application and engine configuration to be evaluated.
13. Locate test vehicle or equipment on a level surface for all stationary tests (except high gradeability applications).

6.5.4 TYPES OF TESTS

The following tests and evaluations are normally conducted to determine system acceptability:

- ☐ Fill and Capability Tests
  - ☐ Continuous Fill
  - ☐ Interrupted Fill
  - ☐ Total System Capacity
  - ☐ Draining Capability
  - ☐ Water Pump Air Test
  - ☐ Deaeration Test
- ☐ Drawdown Test
- ☐ Cooling Index Test

All information subject to change without notice.
7SA2000 0103 Copyright © 2001 DETROIT DIESEL CORPORATION

The cooling system *must* be clean. Run qualification tests on a finalized complete package installed in unit or vehicle.

Perform fill tests with closed thermostats, no pressure cap, and heater, filter circuits, etc. open.

The following factors can cause poor filling capabilities and possible water pump air binding problems:

- ☐ Fill line routing (horizontal)
- ☐ Drooped deaeration lines
- ☐ Incorrect deaeration line location on the engine or deaeration tank
- ☐ Horizontal vortex baffle located on the engine or deaeration tank at fill line opening
- ☐ Routing of coolant lines (drooped) not having a continuous slope
- ☐ Coolant trapped in various cooling system components from a previous fill can prevent air from being purged on the refill
- ☐ Deaeration tank not the highest cooling system component

Continuous Fill

Perform the continuous fill test as follows:

1. Fill the system with water at a constant 11.35 L/min (3 gal/min) rate with cooling system completely empty and all drains closed, until fill neck overflows. The fill *must* be timed so the amount of water can be determined.
2. Start engine (no pressure cap) and idle for approximately two minutes.
3. Increase engine speed slowly to high idle and hold for about one minute.
4. Reduce speed to idle and cycle up and down several times.
5. Make continuous observations throughout the test for aeration, coolant flow direction, and coolant agitation in the deaeration tank.
   [a] Stop engine.
   [b] Add coolant as required to achieve cold full level and record amount. Coolant should be at the bottom of the fill neck extension or to the recommended cold full mark at the conclusion of the test. A satisfactory fill will not require more make up volume than the satisfactory drawdown capacity of the system. The amount of water during the initial fill plus the make up will equal the total system capacity.
6. Verify that no flow in either direction occurs in the bleed line from the radiator to a remote mounted deaeration tank system while the thermostat is closed.
   [a] Verify that no air is being drawn down the fill line as a result of improper engine deaeration line size or location in deaeration tank and excessive agitation of the coolant.

 Copyright © 2001 DETROIT DIESEL CORPORATION

Interrupted Fill

Perform the interrupted fill test as follows:

1. Pour a measured amount of water into the cooling system fill neck as quickly as possible, using the bucket. Allow coolant level to come to rest.
2. Repeat this procedure until fill neck overflows. The measured amount of water is the initial fill volume.
3. Start the engine and measure make up water.

Total System Capacity

Perform the total system capacity test as follows:

1. Completely drain cooling system.
2. Fill to cold full level (bottom of fill neck extension), measuring amount (graduated bucket).
3. Start engine and run near rated speed (no load) for several minutes.
4. Stop engine and add water as required (record amount) until system is to the cold full level.

NOTE:
This amount plus original quantity equals total system capacity.

Draining Capability

Perform the draining capability test as follows:

1. Cool down engine until the thermostat has fully closed.
2. Drain system from supplied draincocks.
3. Measure coolant removed to determine the amount still in the system. Difficulty on the refill can occur if an excessive amount of coolant remains in the system.
4. Refill system per previous procedure and determine if a satisfactory fill can be obtained.

NOTICE:
Cooling systems that cannot be drained completely may also experience freeze cracking of components. Additional drain(s) and a caution notice should be provided by the OEM to ensure complete draining of the cooling system.

Water Pump Binding Test

Determine if the water pump became air bound (pump discharge pressure goes to zero or does not vary with speed change) after initial fill. If so, stop the engine immediately and determine the cause. The deficiency should be corrected and test restarted.

All information subject to change without notice.
7SA2000 0103 Copyright © 2001 DETROIT DIESEL CORPORATION

Deaeration Test

The deaeration test should be run with a closed thermostat, site glass in the coolant out line, clear Tygon™ deaeration line, and coolant at the hot full level (bottom of the filler neck vent, see Figure 6-17).

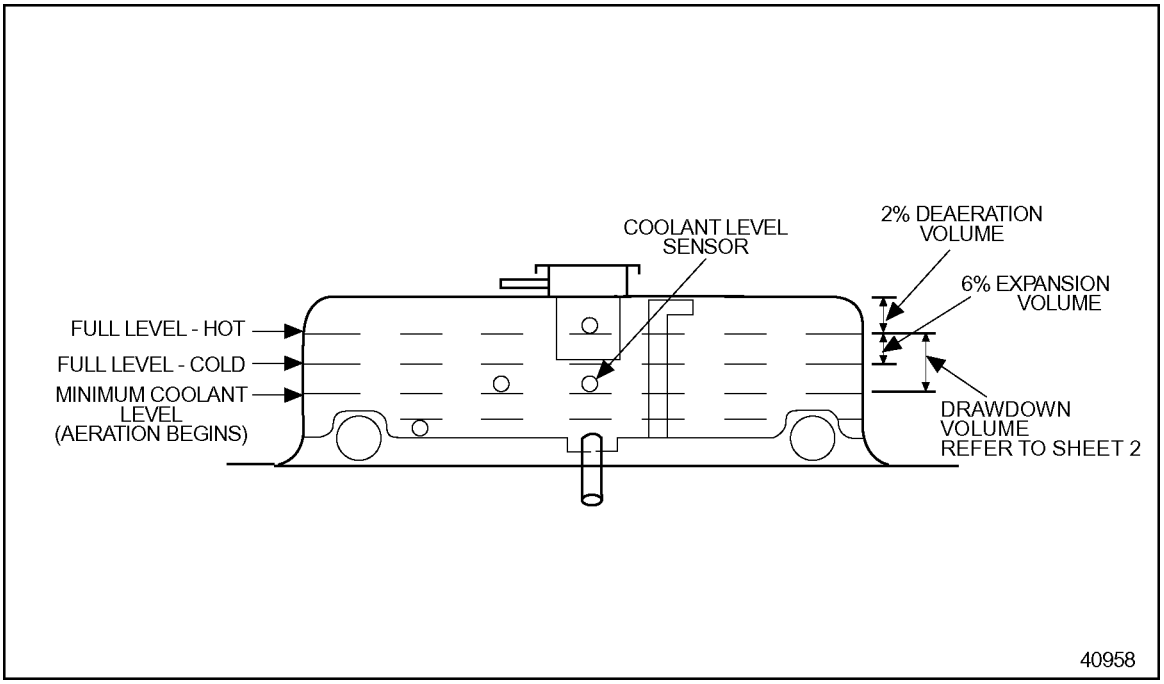

Figure 6-17 Hot-Full Level

Perform the deaeration test as follows:

1. Restart the engine and run near rated speed.
2. Record time to expel all entrained air (larger than pin head size).
3. Satisfactory deaeration should occur within 30 minutes. If system does not appear to deaerate, check for:
   - ☐ Coolant agitation in deaeration tank
   - ☐ High water pump inlet suction
   - ☐ Dirty cooling system or contaminated coolant
   - ☐ Exhaust gas leak into coolant
   - ☐ Water pump seal air leak

Drawdown Test

The drawdown test should be run with a blocked open thermostat, a site glass in the coolant out line, and coolant at the hot full level.

1. Run the engine at rated speed.

 Copyright © 2001 DETROIT DIESEL CORPORATION

2. Look for system aeration. The drawdown level is determined at the first sign of air.
3. Record the amount of coolant removed when aeration begins.
4. Run at maximum tilt angle for installations that operate at severe tilt angles for long periods of time. The drawdown test has been successfully passed if the amount of coolant drained is greater than 8% of system capacity.

Cooling Index Test

NOTE:
A cooling index must be performed for both the jacket water and separate charge air cooler circuits when SCCC is employed.

Perform the cooling index test with blocked open thermostats and the pressure cap installed.

1. Determine the cooling index requirement (air-to-water) as follows:

Determining Cooling Index Requirements

Max. Allowed Water Temperature Refer to sheet 2		_____ °C (°F)
Less Max Ambient Air Temperature Specified by OEM		_____ °C (°F)
Less Altitude Compensation Corrected to sea level - Operating altitude x 1°C per 305 meters (2°F per 1000 ft)		_____ °C (°F)
Less Coolant Compensation 3°C (6°F) fior 50/50 Ethylene Glycol 4.4°C (8°F) for 50/50 Propylene Glycol 0°C (0°F) for water		_____ °C (°F)
Cooling Index Requirement (ATW)	(Total)	_____ °C (°F)

40583

2. Start the test with the cooling system at the deaeration cold full level.
3. Operate the engine at rated speed and full load. The cooling system *must* be set for maximum cooling. All heat sources that will affect engine coolant or radiator air temperatures must be in operation (fans must be in the full on position, shutters locked full open, appropriate ram air supplied, cab heaters in off position, air conditioner set for maximum cooling, etc.).

NOTE:
Other load points (peak torque, 80% converter efficiency, etc.) may be required depending on the application. This should be determined prior to the test.

All information subject to change without notice.
7SA2000 0103 Copyright © 2001 DETROIT DIESEL CORPORATION

4. Calculate the cooling index measurement by subtracting the true ambient temperature and the altitude compensation, from the coolant out temperature:

Cooling Index Measurement Calculation

Average Engine Water Out Temperature		_____ ˚C (˚F)
Less Max Ambient Air Temperature		_____ ˚C (˚F)
Less Altitude Correction Corrected to sea level - Operating altitude x 1˚C per 305 meters (2˚F per 1000 ft)		_____ ˚C (˚F)
Less Coolant Compensation If water is not used during test		_____ ˚C (˚F)
Cooling Index Requirement Achieved	(Total)	_____ ˚C (˚F)

40584

5. See Figure 6-18 for the information to be recorded during the full load test of the jacket water system and see Figure 6-19 for the SCCC system. This information will not only be used to determine the cooling index, but for information needed for other areas of the EPQ or for diagnostic purposes, as well.
6. Various methods of loading the engine to determine cooling index include:
   - ☐ Driveline dynamometer
   - ☐ Towing dynamometer
   - ☐ Chassis dynamometer
   - ☐ Steep hill/heavy load
   - ☐ In operation load cycle
   - ☐ Stationary unit

NOTE:
Test results may be difficult to interpret if wind conditions exceed 10 miles per hour.

7. Calculate a corrected cooling index. See Figure 6-20.

NOTE:
The most effective way to increase cooling capability is by increasing air flow and preventing hot air recirculation.

 Copyright © 2001 DETROIT DIESEL CORPORATION

Application:
Unit No.:
Engine No.:

Observer
Date:
Test Site:

Heat Exchanger Descriptions (type, size, configuration):

Fan Description (type, diameter, speed):

Test Operating Conditions:

Coolant:
Ram Air (kph):
Air Cond. (y/n):
Engine Method:

Altitude:
Wind Cond. (dir.; kph):
Air Cond. Max. Load (y/n):

Reading No.	1	2	3	4	5	6	7	8	9	10
Time										
Ambient Air Temperature										
Engine Coolant Out Temperature										
Engine Coolant In Temperature										
Engine Intake Air Temperature										
Lube Oil Gallery Temperature										
Exhaust Temperature (Optional)										
Engine Coolant Flow Rate										
Jacket Water External Pressure In										
Jacket Water External Pressure Out										
Oil Sump Temperature (Optional)										

Optional Instrumentation for More Detailed System Analysis:

Reading No.		1	2	3	4	5	6	7	8	9	10
Rad. Inlet Air Temperature	UL										
	UR										
	LL										
	LR										
RAD. Outlet Air Temperature	UL										
	UR										
	LL										
	LR										
Air Velocity at Rad. Face	UL*										
	UR*										
	LL*										
	LR*										

*Air velocity need only be measured once for each engine test speed

41078

Figure 6-18 Sample Jacket Water Cooling Index Test Sheets

All information subject to change without notice.
7SA2000 0103 Copyright © 2001 DETROIT DIESEL CORPORATION

Application:
Unit No.:
Engine No.:

Observer
Date:
Test Site:

Heat Exchanger Descriptions (type, size, configuration):

Fan Description (type, diameter, speed):

Test Operating Conditions:

Coolant:
Altitude:
Engine Load Method:

Altitude:
Wind Cond. (dir. kph):
Air Cond. Max. Load (y/n):

Reading No.	1	2	3	4	5	6	7	8	9	10
Time										
Ambient Air Temperature										
CAC Coolant Inlet Temp.										
CAC Coolant Outlet Temp.										
Intake Manifold Air Temperature										
SCCC Coolant Flow Rate										
External SCCC Pressure In										
External SCCC Pressure Out										

Optional Instrumentation for More Detailed System Analysis:

Reading No.		1	2	3	4	5	6	7	8	9	10
SCCC Rad. Inlet Air Temp.	UL										
	UR										
	LL										
	LR										
SCCC RAD. Outlet Air Temp.	UL										
	UR										
	LL										
	LR										
Air Velocity at SCCC Rad. Face	UL*										
	UR*										
	LL*										
	LR*										

*Air velocity need only be measured once for each engine test speed

41077

Figure 6-19 Sample SCCC Cooling Index Test Sheets

 Copyright © 2001 DETROIT DIESEL CORPORATION

Cooling Index Calculation Sheet

Determining Cooling Index Requirements		JWAC	SCCC
Max. Allowed Water Temperature Refer to sheet 2		_____°C (°F)	_____°C (°F)
Less Max Ambient Air Temperature Specified by OEM		_____°C (°F)	_____°C (°F)
Less Altitude Compensation Corrected to sea level - Operating altitude x 1°C per 305 meters (2°F per 1000 ft)		_____°C (°F)	_____°C (°F)
Less Coolant Compensation 3°C (6°F) fior 50/50 Ethylene Glycol 4.4°C (8°F) for 50/50 Propylene Glycol 0°C (0°F) for water		_____°C (°F)	_____°C (°F)
Cooling Index Requirement (ATW)	(Total)	_____°C (°F)	_____°C (°F)
Cooling Index Measurement Calculation			
Average Engine Water Out Temperature		_____°C (°F)	_____°C (°F)
Less Max Ambient Air Temperature		_____°C (°F)	_____°C (°F)
Less Altitude Correction Corrected to sea level - Operating altitude x 1°C per 305 meters (2°F per 1000 ft)		_____°C (°F)	_____°C (°F)
Less Coolant Compensation If water is not used during test		_____°C (°F)	_____°C (°F)
Cooling Index Requirement Achieved	(Total)	_____°C (°F)	_____°C (°F)
Ambient to Intake Manifold Temperature Difference Calculation			
Measured Intake Manifold Temperature		_____°C (°F)	_____°C (°F)
Less Ambient Air Temperature		_____°C (°F)	_____°C (°F)
Ambient to Intake Manifold Temperature Difference	(Total)	_____°C (°F)	_____°C (°F)

41073

Figure 6-20 Cooling Index Calculation Sheet

All information subject to change without notice.
7SA2000 0103 Copyright © 2001 DETROIT DIESEL CORPORATION

6.6 COOLING SYSTEM DIAGNOSTICS AND TROUBLESHOOTING GUIDE

System diagnostics and troubleshooting covers:

- ☐ Engine overheat
- ☐ Cold running engine
- ☐ Poor cab heater performance

6.6.1 ENGINE OVERHEAT

Coolant temperatures should not exceed maximum limit of 99°C (210°F) in most commercial applications so metal and oil temperatures can be controlled for optimum engine performance, fuel economy, and life.

Obvious overheat conditions are determined from the coolant temperature gauge, DDEC data, warning, or shutdown devices. Steam vapor or coolant being expelled through the pressure relief overflow tube is another indication of overheat. Reduced engine performance or engine oil having a burnt odor are other indicators.

Troubleshooting for Engine Overheat

Troubleshoot for engine overheat as follows:

1. Check for inaccurate gauge, warning, or shutdown device, insufficient coolant flow, and inadequate heat transfer capabilities during coolant side investigation.

CAUTION:

To avoid injury from the expulsion of hot coolant, never remove the cooling system pressure cap while the engine is at operating temperature. Remove the cap slowly to relieve pressure. Wear adequate protective clothing (safety glasses, goggles, or face shield, rubber gloves, apron, and boots).

2. Check that the various temperature monitoring devices are calibrated.
   - [a] Sensor probes *must* be located (before thermostat) in a high temperature, well mixed coolant flow path.
   - [b] The sensor *must* be free of scale and other contamination.
3. Check for insufficient coolant flow. The following may be causes of insufficient coolant flow:
   - ☐ Thermostat -- Stuck, sluggish, worn, broken

 Copyright © 2001 DETROIT DIESEL CORPORATION

- ☐ Thermostat seal -- Worn, missing, improper installation
- ☐ Water pump -- Impeller loose or damaged
- ☐ Aerated coolant -- Low coolant level, excessive agitation of deaeration tank coolant, water pump seal failure, exhaust gas leakage (cracked cylinder head or block, damaged seals or gaskets, etc.), incorrect bleed line installation
- ☐ Pressurization loss -- Defective pressure cap/relief valve or seat, debris trapped between seats, internal or external leaks anywhere in the system
- ☐ High restriction -- Radiator plugging (solder bloom), silicate dropout, dirt, debris, etc. collapsed hose(s), foreign objects in the system (shop towels, plugs, etc.)
- ☐ Core Coolant Flow Capacity - Core coolant flow capacity is often described as “free flow." This term is used to indicate gravity flow rate through the core and should equal or exceed the coolant flow rate given on the performance curve (refer to chapter). The design of the radiator inlet and outlet tanks *must* also offer low restriction to coolant flow.
- ☐ Coolant loss -- Internal and external

4. Check for inadequate heat transfer capabilities. The following are possible causes of inadequate heat transfer capabilities:
   - ☐ Radiator selection -- Core selection inadequate for application
   - ☐ Incorrect coolant mixture -- Over/under concentration of antifreeze or inhibitors, corrosive water, incorrect antifreeze or inhibitors
   - ☐ Contamination -- Oil or other material depositing on heat transfer surfaces
5. Check for insufficient air flow. The following are possible causes of insufficient air flow:
   - ☐ High restriction -- Plugged core, damaged or bent fins, shutters not opening correctly, addition of bug screens, winterfronts, noise panels, small air in or air out openings, etc.
   - ☐ Fan/Drives -- Improper drive engagement, fan installed backwards or damaged, insufficient fan speed (drive ratio), etc.
   - ☐ Shroud -- Damaged or missing, not completely sealed
   - ☐ Fan positioning - Excessive fan tip to shroud clearance, incorrect fan placement in shroud, insufficient fan to core distance, insufficient fan to engine distance
6. Check for inadequate heat transfer capabilities. The following are possible causes of inadequate heat transfer capabilities:
   - ☐ Incorrect fan/radiator match -- Severest operating conditions not correctly identified.
   - ☐ Core degradation -- Tube/fin separation, oil film, debris, contamination, etc.
   - ☐ Air recirculation -- Radiator baffles damaged or missing, fan shroud and seal damaged or missing, wind conditions, etc.

All information subject to change without notice.
7SA2000 0103 Copyright © 2001 DETROIT DIESEL CORPORATION

7. Also check the following:
   - ☐ Increased heat rejection or engine horsepower upgrade
   - ☐ Engine, installation, or cooling system modified
   - ☐ Increased engine loading, change in duty cycle
   - ☐ Running at more adverse conditions than original system design permits, higher altitude or temperature

6.6.2 COLD RUNNING ENGINE (OVERCOOLING)

Extended low coolant temperature operation can adversely affect engine performance, fuel economy, and engine life. Overcooling most frequently occurs at extreme low ambient temperatures during long idling or low speed and light load operation.

Consider the following for cold running engines:

- ☐ Inaccurate gauge, out of calibration, lack of markings to determine actual temperature, sensor probe in poor location or not fully submerged in a high coolant flow area.
- ☐ Closed thermostat core coolant flow -- Top tank baffle not completely sealed, standpipe too short or missing, improper sizing of dearation line or standpipe(s) so flow to the top tank exceeds fill line capacity, overfilled cooling system, reverse core flow, thermostat coolant leakage. See test procedures for determining these deficiencies.
- ☐ Defective thermostat -- Stuck open, worn, misaligned, excessive leakage, improper calibration, incorrect start to open setting.
- ☐ Insufficient engine heat rejection -- Excessive low speed and load or idle operation, idle setting too low, over concentration of antifreeze and/or inhibitors, cab and fuel heaters, charge air fan removing heat faster than engine can supply.
- ☐ Fixed fans -- Moves air through core when not required.
- ☐ Shutters/Controls -- Not fully closed, opening temperature too low.

6.6.3 POOR CAB HEATER PERFORMANCE

Poor cab heater performance results from cold running engines.

Inadequate heat in the operator’s environment is symptomatic of poor cab heater performance.

Consider the following to solve poor cab heater performance:

- ☐ Engine coolant temperature below normal.
- ☐ Coolant-side causes
- ☐ Air-side causes
- ☐ Thermostat leakage test
- ☐ Radiator top tank baffle leakage test
- ☐ Top tank imbalance test

 Copyright © 2001 DETROIT DIESEL CORPORATION

Coolant -side Causes

Check various coolant-side causes as follows:

1. Check coolant-side cause, low flow, by investigating the following:
   - ☐ Supply and return lines not connected to proper locations on the engine
   - ☐ Heater system too restrictive - core, plumbing size, bends, shutoff valves, length of circuitry, etc.
   - ☐ Parallel circuitry with multiple cores
   - ☐ Boost pump required, defective, not turned on
   - ☐ Air in heater circuit and coolant
   - ☐ Solder bloom, silicate dropout, dirt, debris, etc.
   - ☐ Shutoff valves not fully opened
   - ☐ Fuel heater in circuit
2. Check coolant-side cause, reduced heat transfer capabilities, by investigating the following:
   - ☐ Improper concentration or grade of antifreeze and inhibitors
   - ☐ Undersized heater core(s)
   - ☐ Heater plumbing not insulated
   - ☐ Low efficiency cores
   - ☐ Contamination of core tube surfaces, deposits, etc.
   - ☐ Fuel heaters plumbed in cab heater circuit

Air-side Causes

Check the following air-side causes:

- ☐ Low efficiency cores
- ☐ Improper air flow
- ☐ Excess outside air through core
- ☐ Core fins separated from tubes
- ☐ Core surface contamination, dirt, debris, oil film, etc.
- ☐ Leaking air ducts
- ☐ Malfunctioning air flow control valves
- ☐ Undersized heater cores
- ☐ Poor distribution system

All information subject to change without notice.
7SA2000 0103 Copyright © 2001 DETROIT DIESEL CORPORATION

Cab interior should be completely sealed to eliminate direct cold air source, in order to conserve available heat energy. Heat loss to outside can be minimized by using thermo windows, reducing exposed metal surfaces, increasing insulation usage, etc.

Thermostat Leakage Test

The following procedure should be used to determine thermostat leakage:

NOTICE:
No coolant should leak past the thermostat, see Figure 6-21, when the thermostat is closed. Overcooling may occur, resulting in poor engine performance, poor cab heater performance, or both.

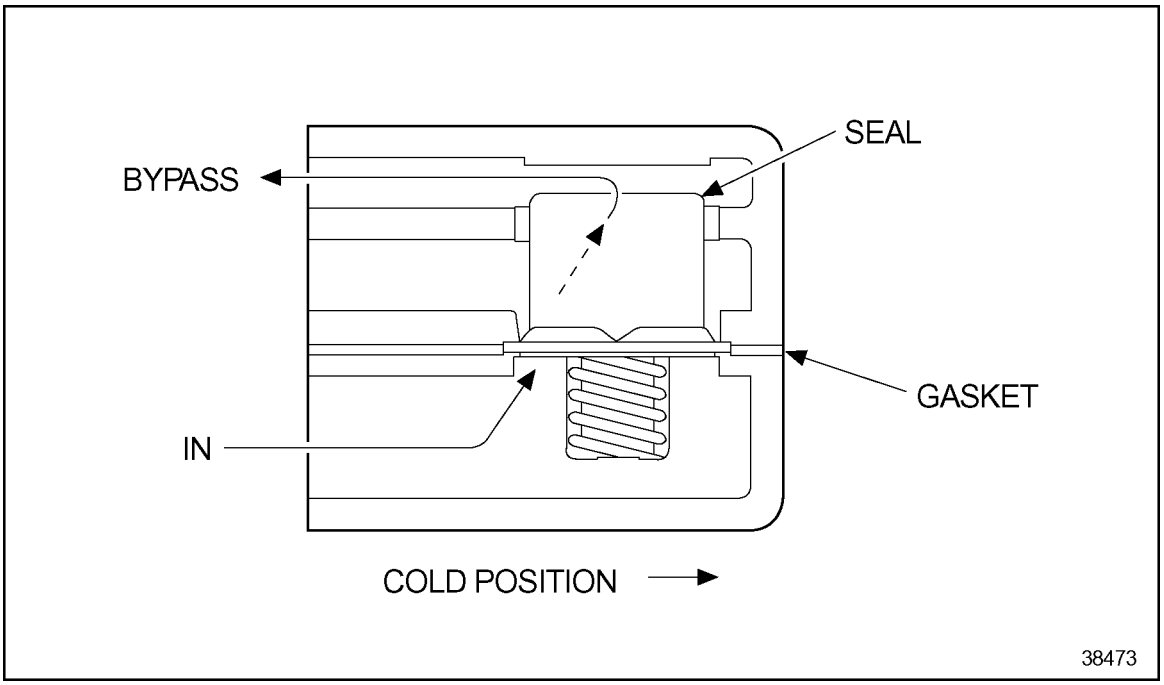

Figure 6-21 Thermostat Leakage Areas

 Copyright © 2001 DETROIT DIESEL CORPORATION

1. Remove radiator inlet hose at the radiator to collect coolant in a container (see Figure 6-22).

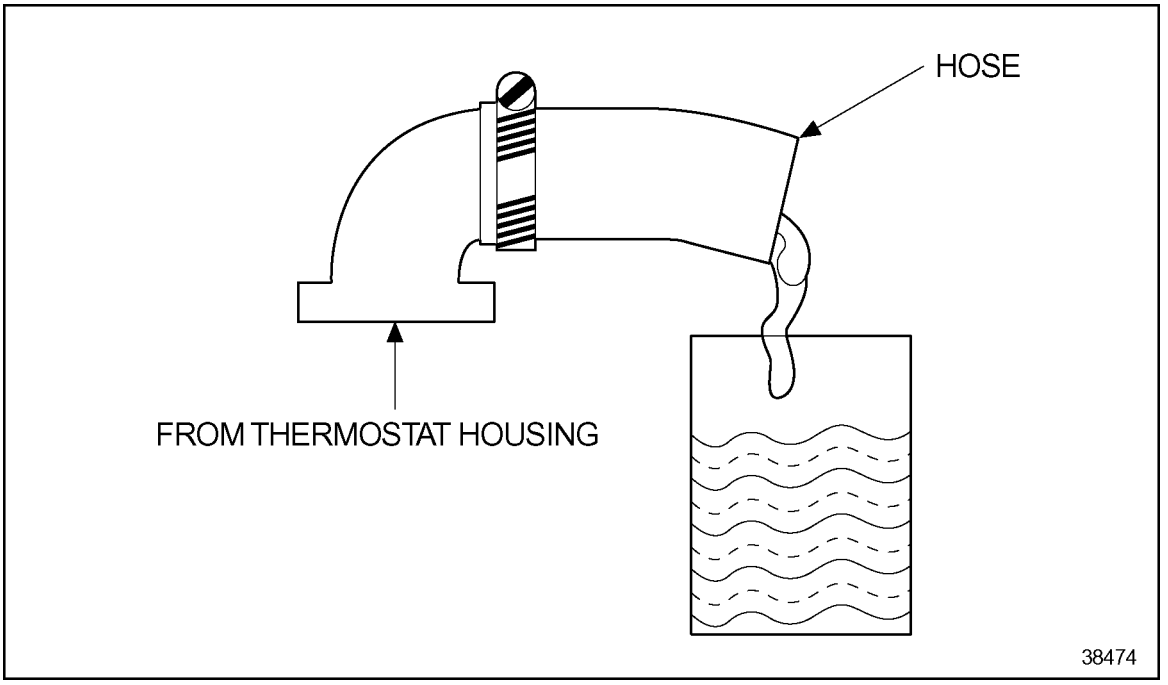

Figure 6-22 Thermostat Leakage Check

2. Fill system with coolant. If thermostat leakage occurs at this point go to step 4.
3. Start engine and accelerate to high idle and hold for approximately one minute. If leakage is more than a trickle, continue to step 5.
4. Remove thermostat and visually inspect thermostat for obvious discrepancies. Go to step 6.
5. Calibrate thermostat to ensure it is not opening prematurely.
6. Replace defective parts.

No coolant should leak past the thermostat when the thermostat is closed. Overcooling may occur, resulting in poor engine performance, poor cab heater performance, or both.

All information subject to change without notice.
7SA2000 0103 Copyright © 2001 DETROIT DIESEL CORPORATION

Radiator Top Tank Baffle Leakage Test

The radiator top tank baffle *must* be sealed so no coolant can flow through the core during closed thermostat operation. The following test procedure will verify if a leaking problem exists:

1. Drain the cooling system.
2. Plug off fill and bleed lines. See Figure 6-23.

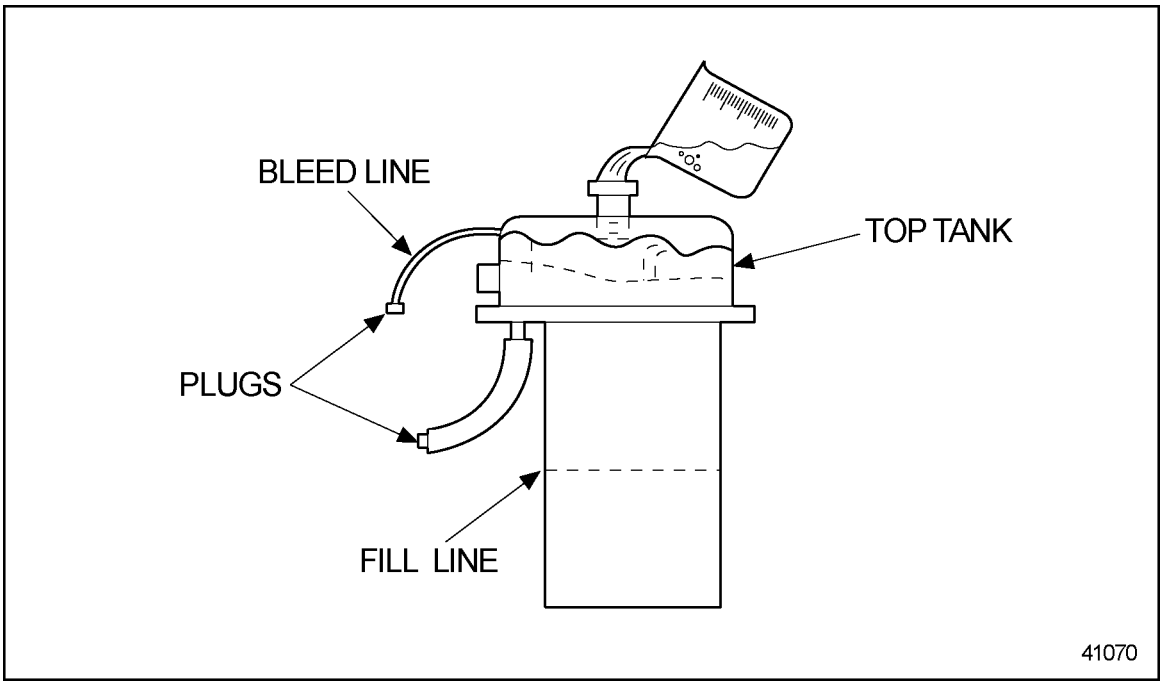

Figure 6-23 Radiator Top Tank Leakage Path

3. Remove radiator inlet hose.
4. Leave radiator drain plug open.
5. Fill top tank to cold full level.
6. Observe level in top tank, and coolant flow from drain and/or radiator inlet opening.
7. If the coolant drains from the top tank, it may indicate the baffle is not completely sealed, the standpipe(s) are too short or the radiator inlet “doghouse" is not sealed (or vent hole was added).
8. Take corrective action if leakage occurs.

Top Tank Imbalance Test

Top tank flow imbalance can cause coolant to flow through the standpipe(s) or radiator to remote surge tank bleed line in either direction during closed thermostat operation causing overcooling. Conduct this test after thermostat and top tank baffle leakage tests have confirmed no problems in those areas.

Test *must* be conducted with a cold engine. The cooling system *must* be at the cold full level (no pressure cap).

 Copyright © 2001 DETROIT DIESEL CORPORATION

1. Install sight glass with string (both ends) in the radiator outlet hose near radiator and before fill and heater return lines. See Figure 6-24. Visual observation of fill and bleed line flow direction is also useful in determining possible cause and solution for a top tank flow imbalance. Utilize clear tubing in these areas.

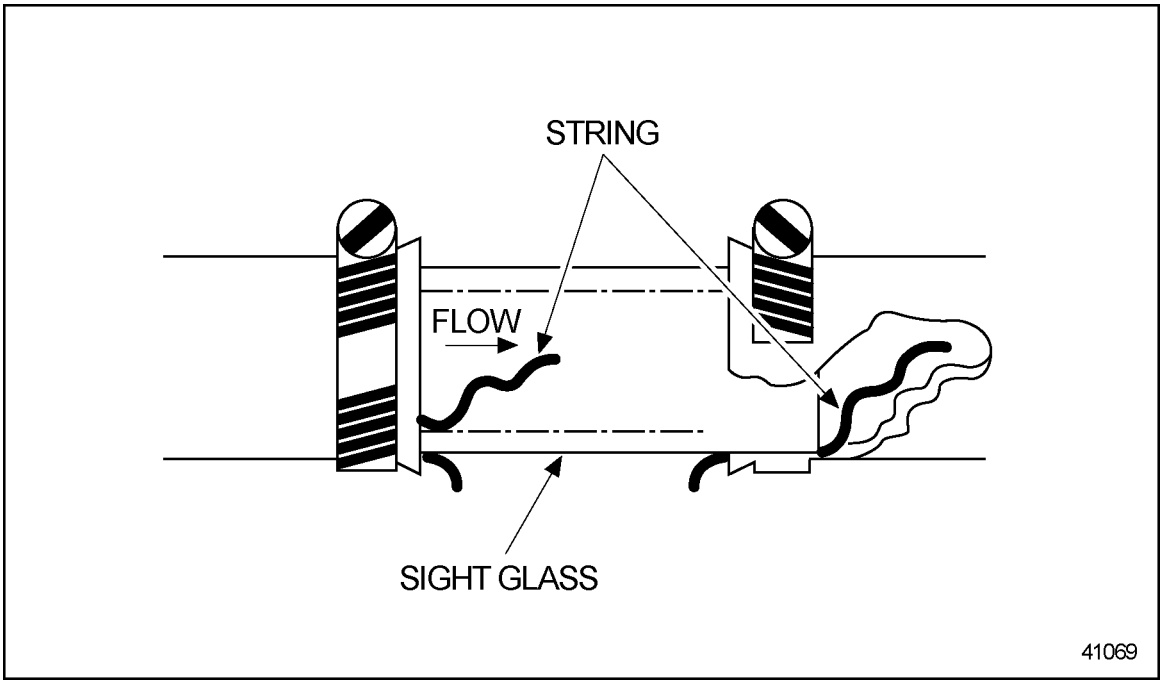

Figure 6-24 Closed Thermostat Radiator Flow Check

NOTICE:
This test procedure cannot be used if the engine water bypass flow is directed to the radiator bottom tank for transmission coolers, etc.

2. Start the engine and observe the string for flow and direction.
   [a] Check the coolant flow in the fill and bleed lines.
   [b] Continue making observations as the engine speed is slowly raised to high idle. If flow is observed in the sight glass, an imbalance exists and corrective action should be taken.

Top tank flow imbalance causes are:

- ☐ Bleed line size too large
- ☐ Fill line size too small and/or connecting fittings size too restrictive
- ☐ Fill line connected to a pressure area. Visual observation of the fill line flow will show if the flow is incorrectly going to the surge tank.
- ☐ Main engine flow past fill line opening in top tank too restrictive
- ☐ Standpipe(s) not above coolant level
- ☐ Use of coolant recovery system

All information subject to change without notice.
7SA2000 0103 Copyright © 2001 DETROIT DIESEL CORPORATION

7 FUEL SYSTEM

The purpose of the fuel system is to keep the fuel clean and free from air or water, and to deliver this fuel at the correct pressure to the electronic unit pump.

7.1 FUEL SYSTEM DESCRIPTION

A fuel system consists of:

- ☐ A fuel tank
- ☐ Primary fuel filter
- ☐ Fuel supply pump
- ☐ Secondary fuel filter
- ☐ Electronic Unit Pump (EUP)
- ☐ High pressure fuel lines
- ☐ Fuel injection nozzle assemblies
- ☐ Electronic Control Module (ECM)
- ☐ All necessary piping

Fuel is drawn from the tank and through a primary fuel filter by the fuel pump. Fuel is then pumped at low pressure to all the EUPs. Each EUP supplies fuel, at high pressure, to its respective nozzle, via a high pressure fuel line.

Fuel that spills from the EUPs flows through a regulator valve to a junction block. The purpose of the regulator valve is to maintain a minimum pressure in the low pressure side of the fuel system. Each injector nozzle also spills a small amount of fuel. This is also returned to the fuel junction block. Fuel is returned from the fuel junction block to the fuel tank by a single return line.

The Series 2000 fuel system does not include an ECM cold plate.

The ECM receives data (such as temperature and speed), analyzes this data, and modulates the fuel system accordingly to ensure efficient engine operation. The signal that the ECM sends to the unit pump determines the timing and amount of fuel delivered to the engine.

See Figure 7-1 on page 7-1 for a Series 2000 8V fuel system schematic. See Figure 7-2 on page 7-2 for a schematic diagram of the Series 2000 12V and 16V fuel systems.

 Copyright © 2001 DETROIT DIESEL CORPORATION

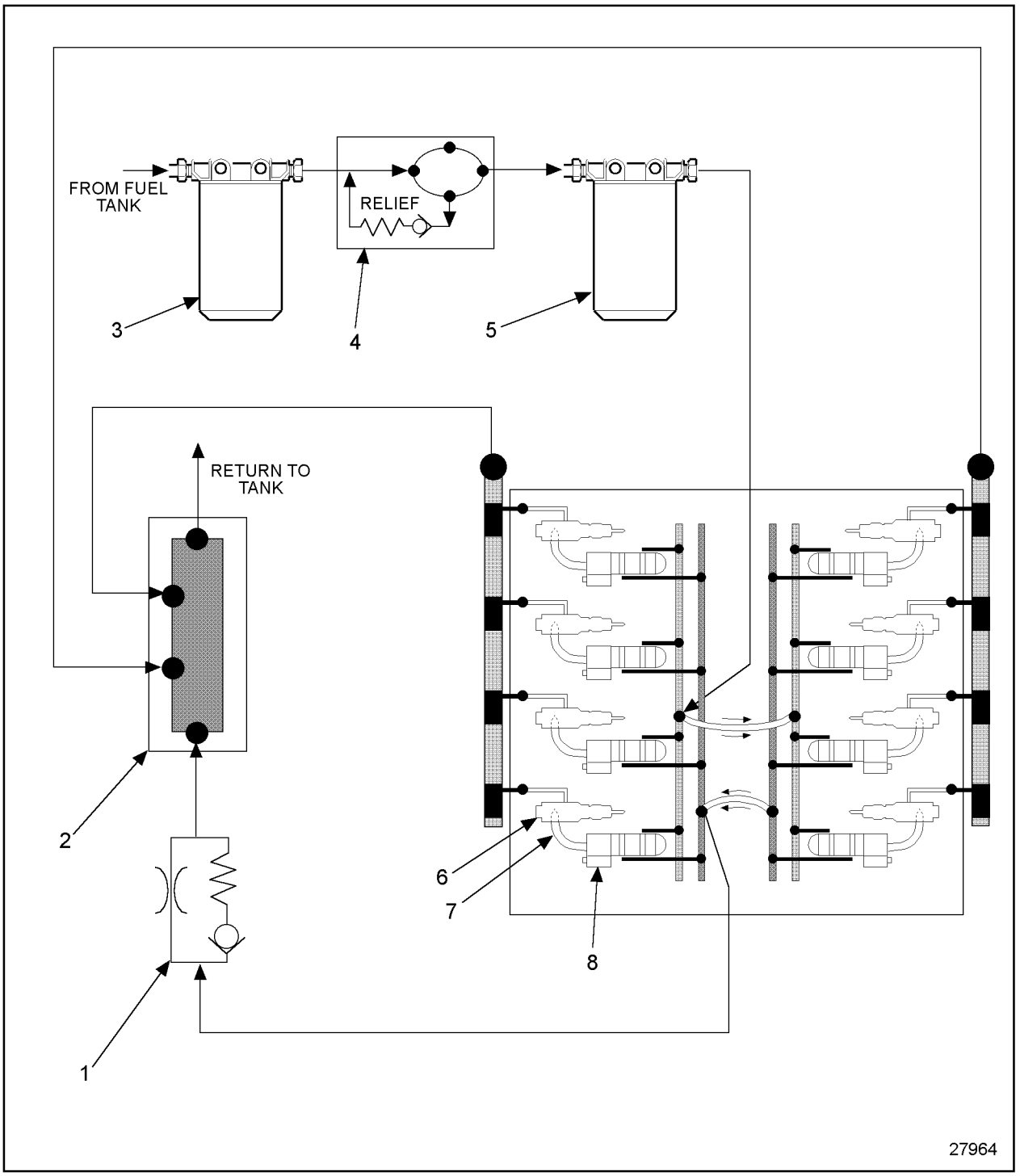

1. Primary Fuel Filter
2. Fuel Pump
3. Secondary Fuel Filter
4. Nozzle
5. High Pressure Fuel Line
6. Electronic Unit Pump
7. Regulator/Relief Valve
8. Junction Block

Figure 7-1 Series 2000 8V Fuel System Schematic

All information subject to change without notice.
7SA2000 0103 Copyright © 2001 DETROIT DIESEL CORPORATION

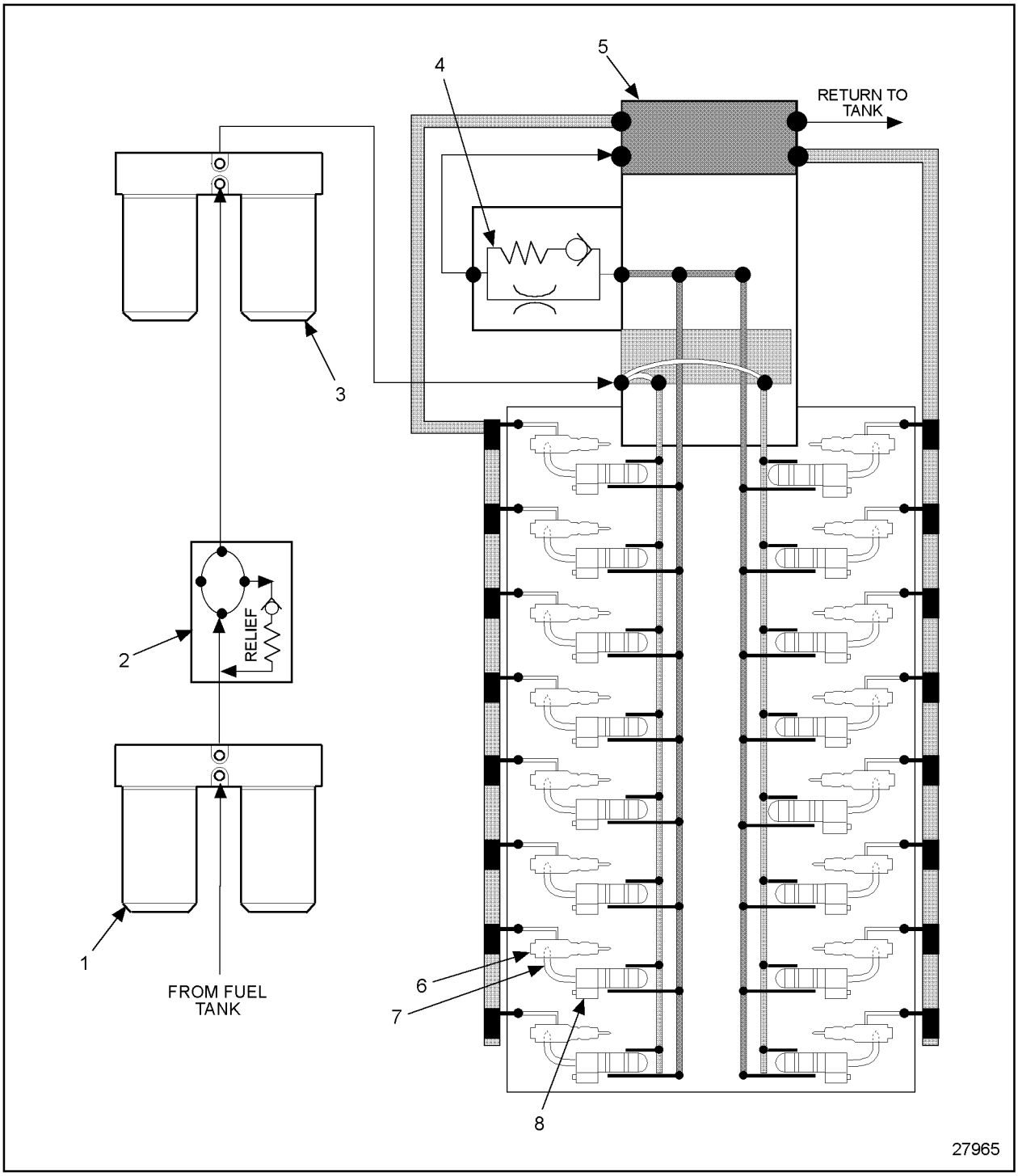

1. Primary Fuel Filter
2. Fuel Pump
3. Secondary Fuel Filter
4. Regulator/Relief Valve
5. Junction Block
6. Nozzle
7. High Pressure Fuel Line
8. Electronic Unit Pump

Figure 7-2 Series 2000 12V & 16V Fuel System Schematic

 Copyright © 2001 DETROIT DIESEL CORPORATION

7.1.1 ELECTRONIC UNIT PUMP

The EUP provides fuel to the fuel injector nozzle. The nozzle directs pressurized fuel directly into the combustion chamber. There are three basic fuel movements through the unit pump: fill, injection, and spill. Each of these movements takes place during one camshaft revolution. See Figure 7-3.

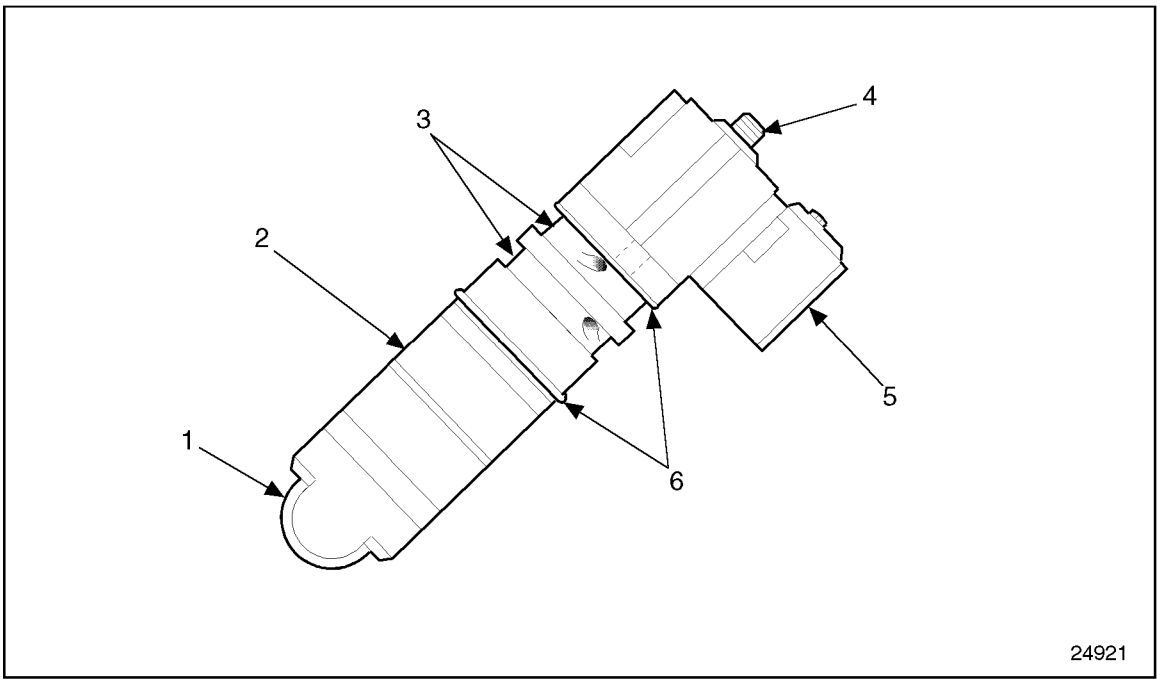

1. Camshaft roller
2. Unit Pump Assembly
3. Fuel Gallery Channels
4. Fuel Outlet Port
5. Unit Pump Solenoid
6. Seal Rings

Figure 7-3 Electronic Unit Pump Assembly

Fuel fills the chamber as the cam begins its downward motion. As the plunger moves downward with the cam, the engine fuel supply pushes fuel into the pumping chamber.

While the plunger is moving upward, the ECM sends a signal to the pump. This signal moves the control valve to the closed position. In this position, the valve acts as a dam that creates high pressure fuel for injection to the cylinder. Injection ends when the control valve re-opens during the upward motion of the cam. The opening of the valve is controlled by the ECM. When the valve opens, the dam that created the high pressure is released, allowing fuel to spill back into the fuel tank. Fuel continues to spill until the plunger reaches the top of the cam cycle.

All information subject to change without notice.
7SA2000 0103 Copyright © 2001 DETROIT DIESEL CORPORATION

High pressure injection takes place only when the valve is closed and the plunger is rising. Low pressure spilling takes place when the valve is open and the plunger is moving downward. See Figure 7-4.

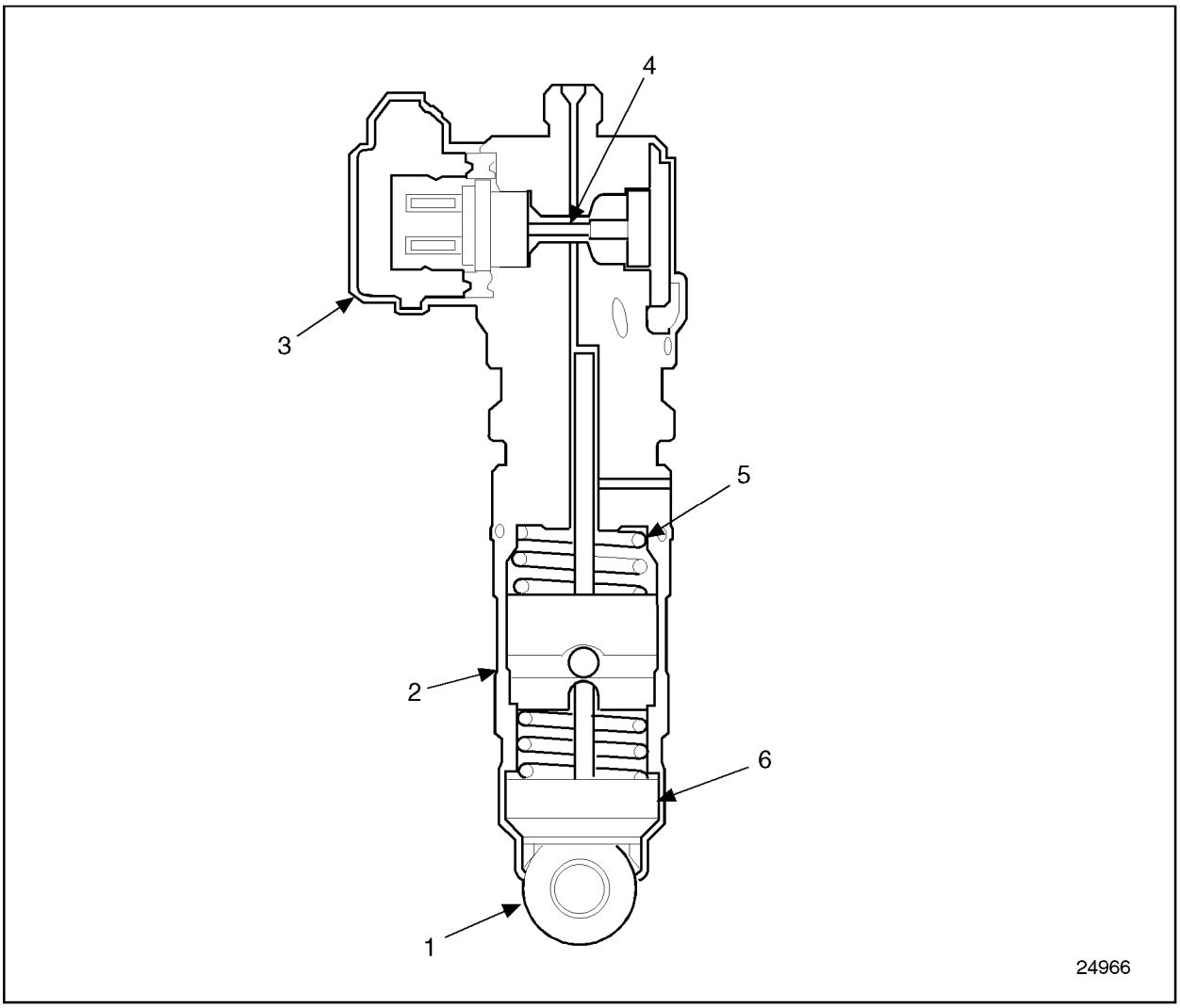

1. Camshaft Roller
2. Unit Pump Body
3. Solenoid
4. Solenoid Plunger
5. Plunger Spring
6. Plunger

Figure 7-4 Electronic Unit Pump Cutaway

 Copyright © 2001 DETROIT DIESEL CORPORATION

7.1.2 FUEL SUPPLY PUMP

The fuel supply pump is a positive displacement gear-type fuel pump. See Figure 7-5.

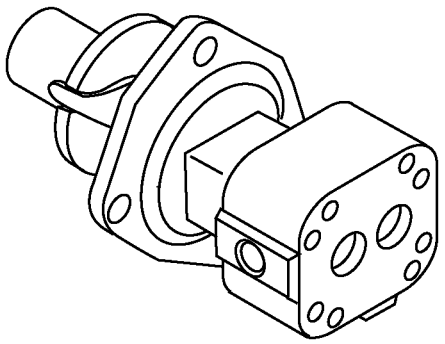

Figure 7-5 Positive Displacement Gear-type Fuel Supply Pump

The fuel supply pump transfers fuel from the supply tank to the EUP. The pump circulates excess fuel supply through the EUPs. This purges the air from the system and cools the EUPs. The unused fuel returns to the fuel tank via the fuel return line.

All information subject to change without notice.
7SA2000 0103 Copyright © 2001 DETROIT DIESEL CORPORATION

7.2 FUEL SYSTEM EQUIPMENT/INSTALLATION GUIDELINES

The following installation guidelines cover:

- ☐ Fuel tank
- ☐ Fuel cooler
- ☐ Fuel Filters
- ☐ Fuel lines

7.2.1 FUEL TANK

Fuel tanks must be made of the correct material, be properly designed and located, and be adequately sized regardless of the fuel tank configuration being used.

Material

Satisfactory fuel tank material is steel, aluminum, or a suitably reinforced plastic. The inside(s) should be clean and free from all impurities likely to contaminate the fuel.

NOTICE:
Do not use a fuel storage tank or lines made from galvanized steel. The fuel will react chemically with the galvanized coating to form powdery flakes that will quickly clog fuel filters and cause damage to the fuel pump and injectors

The fuel tank(s) ***must not*** be galvanized internally under any circumstances.

The fuel tank(s) may be galvanized or painted on the outside to prevent rusting.

Design

Baffles *must* be positioned to separate air from fuel and to prevent fuel from sloshing between the ends of the tank(s) in mobile applications. The baffles should extend from the top to the bottom of the tank(s). These baffles should have passageways which allow the fuel to maintain an even level throughout the tank(s).

The tank(s) should have a readily accessible drain valve at the bottom for easy removal of contaminants.

The location of the fill neck(s) should be a clean, accessible location with sufficient height and room for an average size fill can or tanker truck hose. Position a removable wire screen of approximately 1.58 mm (.062 in.) mesh in the fill neck(s) to prevent large particles of foreign material from entering the tank(s).

The tank(s) must have a vent which meets applicable regulations.

 Copyright © 2001 DETROIT DIESEL CORPORATION

Capacity

Carefully choose the capacity of the fuel tank(s) to suit the specific engine installation. The design of tanks in mobile applications must include the supply pipe so that adequate fuel is available under all operational gradients. The tank(s) capacity must be at least 5% greater than the maximum fill level to allow for fuel expansion.

Fuel capacity of the tank(s) should be appropriate for the specific application involved.

Position

The position of the fuel tank(s) is an important factor in any application.

The position of the fuel tank(s) should ensure the following whenever possible.

- ☐ The difference in height between the fuel tank(s) and engine supply pump is kept to a minimum.
- ☐ The length of fuel feed pipe is kept to a minimum.
- ☐ Locate the fuel tank(s) away from any excessive heat source.
- ☐ The filling point is easy to access and simple to use.

The fuel supply pump should not be more than five feet above the lowest fuel level possible in the fuel tank(s).

The fuel tank(s) should not be located higher than the fuel pump.

Install a shutoff valve for use when changing the primary filter if the fuel tank(s) is above the primary filter. This will prevent the tank(s) from draining.

7.2.2 FUEL COOLER

Series 2000 applications may require a fuel cooler. The temperature of the fuel entering the engine must be maintained below 60°C (140°F) under all operating conditions. If the fuel temperature cannot be maintained, a fuel cooler must be used. Typically the fuel cooler will be located in the spill side of the fuel system, between the fuel junction and the fuel tank.

A fuel cooler may be purchased from:

L & M Radiator, Inc.	**Young Radiator Company**
1414 East 37th St.	2825 Four Mile Road
Hibbing, Minnesota 55746	Racine, Wisconsin 53404
Phone: 218/263-8993	Phone: 414/639-1010
Fax: 218/263-8478	Fax: 414/639-1013

Fuel coolers meeting these criteria may also be available from other sources.

All information subject to change without notice.
7SA2000 0103 Copyright © 2001 DETROIT DIESEL CORPORATION

7.2.3 FUEL FILTER CONFIGURATION

All applications must include the following:

- ☐ Primary filter(s) with a minimum micron rating of 28-33 microns at 98% efficiency.
- ☐ Secondary filter(s) with a minimum micron rating of 2.5-5.5 microns at 98% efficiency.

A brand of filter other than DDC can be substituted. Contact Detroit Diesel Application Engineering for specific application and configuration guidelines.

Priming of the fuel system may be necessary on a first time start (refer to section 7.2.5).

7.2.4 FUEL LINES

The following guidelines apply to supply and return lines between the fuel filter header and the tank(s) only.

NOTICE:
Do not use a fuel storage tank or lines made from galvanized steel. The fuel will react chemically with the galvanized coating to form powdery flakes that will quickly clog fuel filters and cause damage to the fuel pump and injectors

These guidelines apply regardless of which fuel tank configuration is being used.

Do not modify or tamper with any fuel lines supplied with the engine.

 Copyright © 2001 DETROIT DIESEL CORPORATION

Design

All lines should be in protected areas. These areas should be free from possible damage, and securely clipped in position to prevent chaffing from vibration. Take the necessary precautions to ensure that the inlet line connections are tight so air cannot enter the fuel system.

The careful selection of line routing cannot be overemphasized. Avoid excessively long runs.

Minimize the number of connections, sharp bends, or other features that could lead to air trapping, excessive resistance to flow, or waxing of fuel in cold conditions.

The supply and return lines must extend to the low level of useful tank volume. Extending the return line to this level prevents siphoning of fuel on the supply side back to the tank.

The fuel supply line must be above the bottom of the tank to ensure that dirt and sediments are not drawn into the fuel system. Allow 5% clearance volume above the bottom of the tank.

The supply and return lines must be well supported within the tank. Cracks on the supply side can cause the entrance of air and a subsequent loss of power. The supply and return lines must be separated by at least 12 in. inside the tank to prevent mixing of hot return fuel with cold in tank fuel.

The supply line should be at the center of the tank to compensate for angular operation (see Figure 7-6).

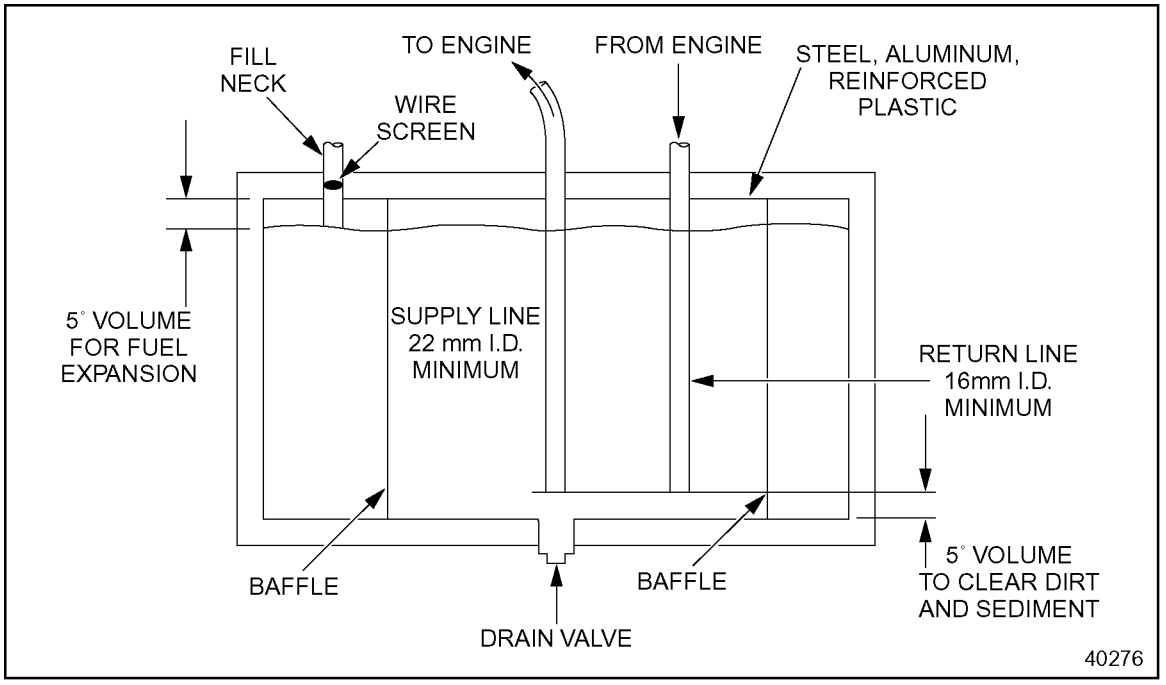

Figure 7-6 Properly Designed Fuel Tank for Series 2000 8V

All information subject to change without notice.
7SA2000 0103 Copyright © 2001 DETROIT DIESEL CORPORATION

Material

DDC does not approve the use of copper tubing because copper becomes brittle due to cold working when subjected to vibration.

Flexible hosing must be resistant to fuel oil, lubricating oils, mildew, and abrasion, and must be reinforced.

The lines must withstand a maximum suction of 508 mm Hg (20 in. Hg) without collapsing, a pressure of 7.03 kg/cm2 (100 lb/in.^{2}) without bursting, and temperatures between -40°C (-40°F) and 149°C (300°F).

Size

The determinant of fuel line size, listed in Table 7-1, is the restriction measured at the inlet of the fuel pump. The maximum allowable inlet restriction, with a clean system, is 152 mm Hg (6 in.Hg) for all applications.

Engine	Supply Line I.D. mm (SAE Hose Size)	Return Line I.D. mm (SAE Hose Size)
8V	22 (#14)	16 (#10)
12 & 16V	28 (#18)	19 (#12)

Table 7-1 Guide for Fuel Line Sizes

7.2.5 PRIMING THE FUEL SYSTEM

Priming is usually not necessary if the filter elements are filled with fuel when installed and the manifolds are not drained of fuel.

If air has entered the fuel system, the system must be primed to ensure prompt starting and running. To prime the system, connect a manual or electric priming pump to the secondary fuel filter. Authorized Detroit Diesel service outlets are equipped to perform this service.

 Copyright © 2001 DETROIT DIESEL CORPORATION

7.3 FUEL SPECIFICATIONS

The quality of fuel used is a very important factor in obtaining satisfactory engine performance, long engine life, and acceptable exhaust emissions levels. Series 2000 engines are designed to operate on most diesel fuels marketed worldwide. Listed in Table 7-2 are the properties and ranges for the characteristics of fuels which will provide optimum engine performance.

General Fuel Classification	Limit	ASTM	ISO
Specific Gravity 15°C	0.810 g/ml minimum 0.860 g/ml maximum	D 1298	3675
API Gravity, @ 60°F	33 minimum 43 maximum	D 287	
Viscosity at 40°C	1.3 cSt minimum 4.5 cSt maximum	D 445	3104
Sulfur*	0.5 mass % maximum	D 2622	EN 24260
Distillation Temperature: Initial Boiling Point (IBP) 50% 95%	160 - 200°C Typical 225 - 275°C Typical 360°C maximum	D 86	3405
Recovery	97% minimum		
Cetane Number	45 minimum	D 613	5165
Cetane Index	42 minimum	D 4737	4264
Total Contamination	24 mg/kg maximum		DIN 51419
Water & Sediment	0.05 vol. % maximum	D 2709	
Ash	0.01 mass % maximum	D 482	6245
Oxidation Stability	25 g/m maximum	D 2274	
Carbon Residue on 10% Distillation Residue	0.3 mass % maximum	D 189	10370
Copper Corrosion 3 h at 50°C	Class.: 1a	D 130	2160
Flash Point	†	D93	2719
Filter Plugging Point	‡	D 4359	309
Lubricity	§	D 6079 or D 6078	12156

* Sulfur levels above 0.5 % requires the use of a high TBN engine oil and reduced oil drain intervals.

† The flash point temperature is a safety related property which must be established according to applicable local requirements.

‡ It is the fuel supplier's responsibility to provide a fuel with adequate low temperature operability for the geographic region and conditions anticipated to assure proper engine operation.

§ The lubricity of the fuel must be sufficient to prevent fuel injection system failures and is the responsibility of the fuel supplier.

Table 7-2 Diesel Fuel Selection Criteria

All information subject to change without notice.
7SA2000 0103 Copyright © 2001 DETROIT DIESEL CORPORATION

7.3.1 FUEL CLEANLINESS

Fuel should be clean and free of contamination. Storage tanks and stored fuel should be inspected regularly for dirt, water, or water-emulsion sludge, and cleaned if contaminated. Storage instability of the fuel can lead to the formation of varnish or sludge in the tank. The presence of these contaminants from storage instability must be resolved with the fuel supplier. If fuel is stored on site, the following is recommended:

- ☐ Do not use a fuel storage tank or lines made from galvanized steel. The fuel will react chemically with the galvanized coating to form powdery flakes that will quickly clog fuel filters and cause damage to the fuel pump and injectors.
- ☐ Keep the storage tank filler cap covered to prevent contamination by rain water.
- ☐ Keep the tank clean, especially around the filler cap and tap areas.
- ☐ Position the tank so that it tilts slightly toward the bottom drain. This will make it easier to drain accumulated water and sediment.
- ☐ Minimize condensation by keeping the tank reasonably filled at all times.
- ☐ After filling the fuel storage tank, wait a few hours before filling equipment tanks. This will allow contaminants to settle.

7.3.2 COLD WEATHER OPERATION

In cold weather, diesel fuel will form wax crystals that can restrict flow and clog filters. Fuel suppliers approach this problem several ways. Some provide a specially refined product while others may use flow improving additives or winter blends. Winter blended fuel will likely contain kerosene or 1-D fuel which provide good cloud point temperatures but will result in a lighter fuel with a lower heat content. The use of such fuels is acceptable but may result in reduced engine power and/or fuel mileage.

7.3.3 USING DRAINED LUBRICATING OIL IN DIESEL FUEL

The disposal of waste oil is a serious environmental concern, best addressed by the engine oil supplier, who should accept responsibility for proper disposal of this material as part of the business of providing lubricant. Detroit Diesel will not be responsible for any detrimental effects that it determines result from this practice.

NOTICE:
Detroit Diesel does NOT recommend blending engine drain oil into diesel fuel. Such practice will adversely effect exhaust emissions, and will likely result in damage to the fuel injection system and the formation of excessive combustion deposits.

 Copyright © 2001 DETROIT DIESEL CORPORATION

7.3.4 FUEL ADDITIVES

Series 2000 engines are designed to operate satisfactorily on a wide range of diesel fuels. Many of these fuels already contain performance additives. Supplemental additives are not recommended and may cause damage to fuel injection system components.

7.3.5 BIODIESEL FUELS

These fuel blends have not been fully evaluated relative to diesel fuel system durability or engine oil effects. Biodiesel fuels may be produced from a wide variety of sources and may be used in Series 2000 engines provided the fuels are derived from soy methyl ester (SME) and rape methyl ester (RME) and are blended to a maximum of 20% by volume in diesel fuel. The resulting blend must meet the properties listed Table 7-2, "Diesel Fuel Selection Criteria."

These fuel blends may increase engine exhaust NOx content and are intended to reduce exhaust emissions particulates. Fuel blends also tend to have poorer thermal stability and may deteriorate engine oil total base number (TBN) more rapidly than wholly petroleum based diesel fuels. Use of biodiesel fuels may require the use of Category 2 oils at one half the normal recommended oil drain intervals.

All information subject to change without notice.
7SA2000 0103 Copyright © 2001 DETROIT DIESEL CORPORATION

7.3.6 OTHER FUELS

Fuel oils classified as Burner fuels, Jet Fuels, and others may be used in Series 2000 engines provided the requirements listed in Table 7-2 are met. Fuels of a lower specific gravity generally contain a lower specific heat content and may result in a reduction in engine power.

General recommendations for various fuels and their effect on engine power are listed in Table 7-3.

Fuel Type	Estimated Effect on Power	Recommendation	Comments
No. 2D	Baseline	OK to Use	ASTM D-975 2-D
No. 1D	4% Loss	OK to Use	ASTM D-975 1-D
CONUS DF-2	No Effect	OK to Use	Specified military use inside continental U.S.
CONUS DF-1	4% Loss	OK to Use	Specified military use inside continental U.S.
OCONUS DF-2	3% Loss	Not recommended if sulphur exceeds .5 mass %	Specified military use outside continental U.S.
JP4	20% Loss	Not Permitted	Low viscosity. low specific gravity and low lubricity will result in severely reduced engine life.
JP5	5% Loss	Not Recommended*	Low Viscosity
JP8	11% Loss	Not Recommended*	Low Viscosity
JET A	10% Loss	Not Recommended*	High API Gravity, Low Viscosity
Fuel/Lube Mixtures†	Unavailable	Not Recommended	Evaluated on an individual basis

* One or more properties violate the DDC fuel specification.
† Fuel/Lube refers to mixtures of used motor oil and diesel fuel. Refer to section 7.3.3.

Table 7-3 Fuel Types

NOTE:
Consult DDC before considering the use of any fuel that is not approved.

 Copyright © 2001 DETROIT DIESEL CORPORATION

THIS PAGE INTENTIONALLY LEFT BLANK

 Copyright © 2001 DETROIT DIESEL CORPORATION

8 LUBRICATION SYSTEM

The pressurized lubricating oil system is a full flow filtered and cooled type with a bypass valve, pressure regulation, and a minimum of external piping. External oil piping is kept to a minimum to avoid oil leakage.

An internal tooth gear oil pump is mounted on the block and driven by the engine crankshaft at the rear of the engine. The Series 2000 8V uses a two gear pump and the 12V and 16V use a three gear pump. The right side of the engine has the oil cooler and replaceable oil filters. The turbocharger oil lines are on each side of the engine. The dipstick and oil fill location are on the right side of the engine, but optional locations are available. The crankcase breathers are located on the rocker covers on both sides of the engine for the open breather system.

This section describes the functions, installation, design, and testing requirements for the lube system of a Series 2000 engine.

8.1 LUBRICATION SYSTEM DESCRIPTION

Oil is drawn from the oil pan through the strainer and suction tube to the inlet port into the oil pump to the rest of the engine. Oil is transferred through the block, and then to the transfer housing on the 8V. Oil is directed through a transfer tube and then to the transfer housing on the 12V and 16V. Oil flows from the transfer housing through the back of the oil cooler, through the filters, and then into the oil cooler. Oil flows from the oil cooler back into the transfer housing into the block.

The block has two main oil galleries that feed the crankshaft journals, up through the connecting rods to the piston pins as well as feeding nozzles that spray the pistons and camshaft. The front crank support bearing is lubricated directly from the oil transfer housing. Oil travels from the galleries directly to the air compressor, turbochargers, and valve train. The gear train is lubricated from the main galleries.

Oil from the gear case is drained directly into the oil pan. The valve train is drained through holes that empty into the oil pan. Oil from the turbocharger drains through lines that pass along the flywheel housing and then drain into the oil pan.

A schematic of the lubrication system may be seen on the next page (see Figure 8-1).

 Copyright © 2001 DETROIT DIESEL CORPORATION

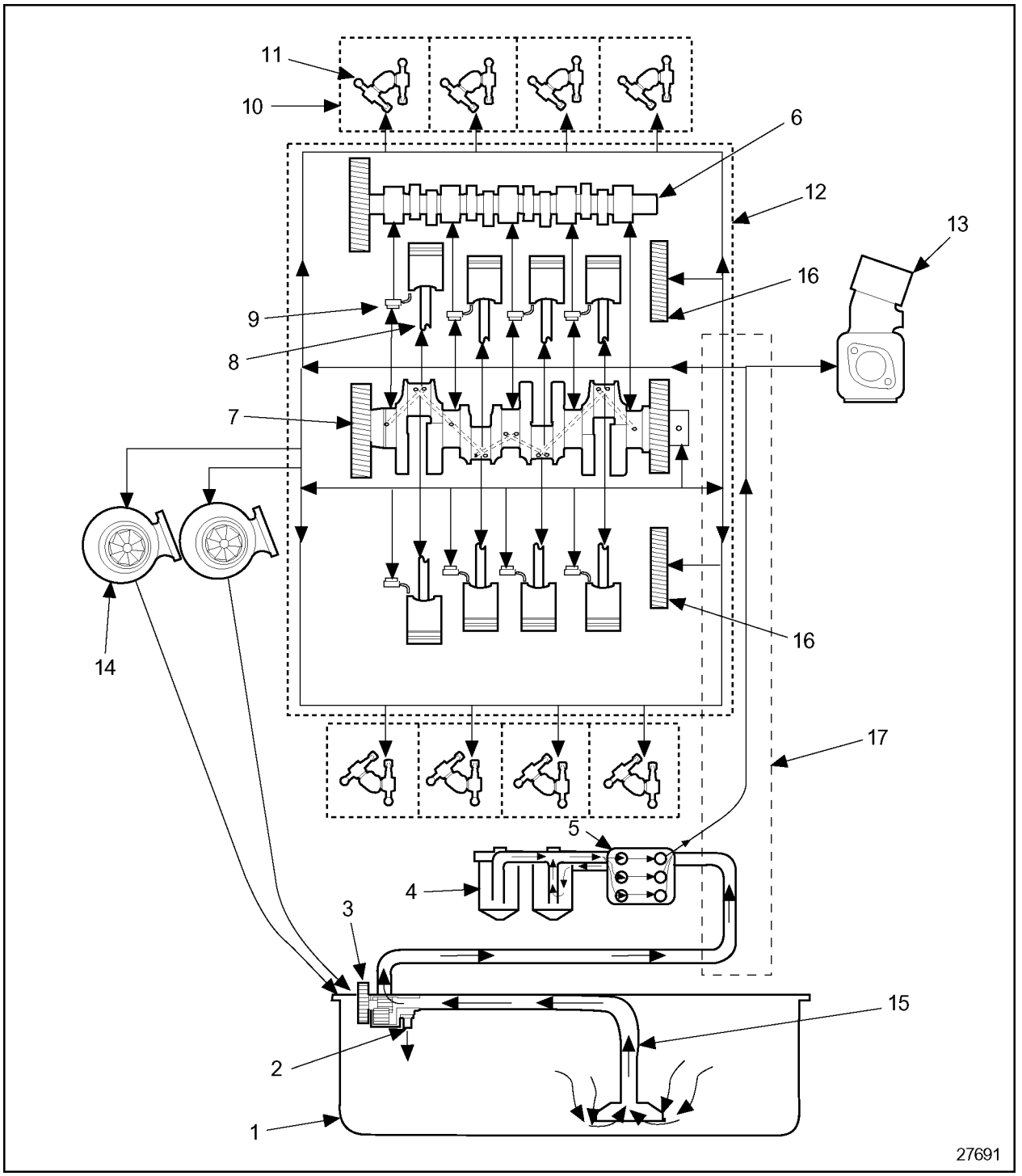

1. Oil Pan
2. Oil Pressure Relief Valve
3. Oil Pump Assm
4. Oil Filters (with Internal Bypass Valve)
5. Oil Cooler Assm
6. Camshaft
7. Crankshaft
8. Piston & Conn Rod Assm
9. Piston Oil Nozzle
10. Cylinder Heads
11. Rocker Arm Assemblies
12. Cylinder Block
13. Air Compressor Assm
14. Turbocharger (2)
15. Oil Pick-up Tube & Screen Assm
16. Idler Gears (2)
17. Transfer Housing

Figure 8-1 Series 2000 8V Lubrication System

All information subject to change without notice.
7SA2000 0103 Copyright © 2001 DETROIT DIESEL CORPORATION

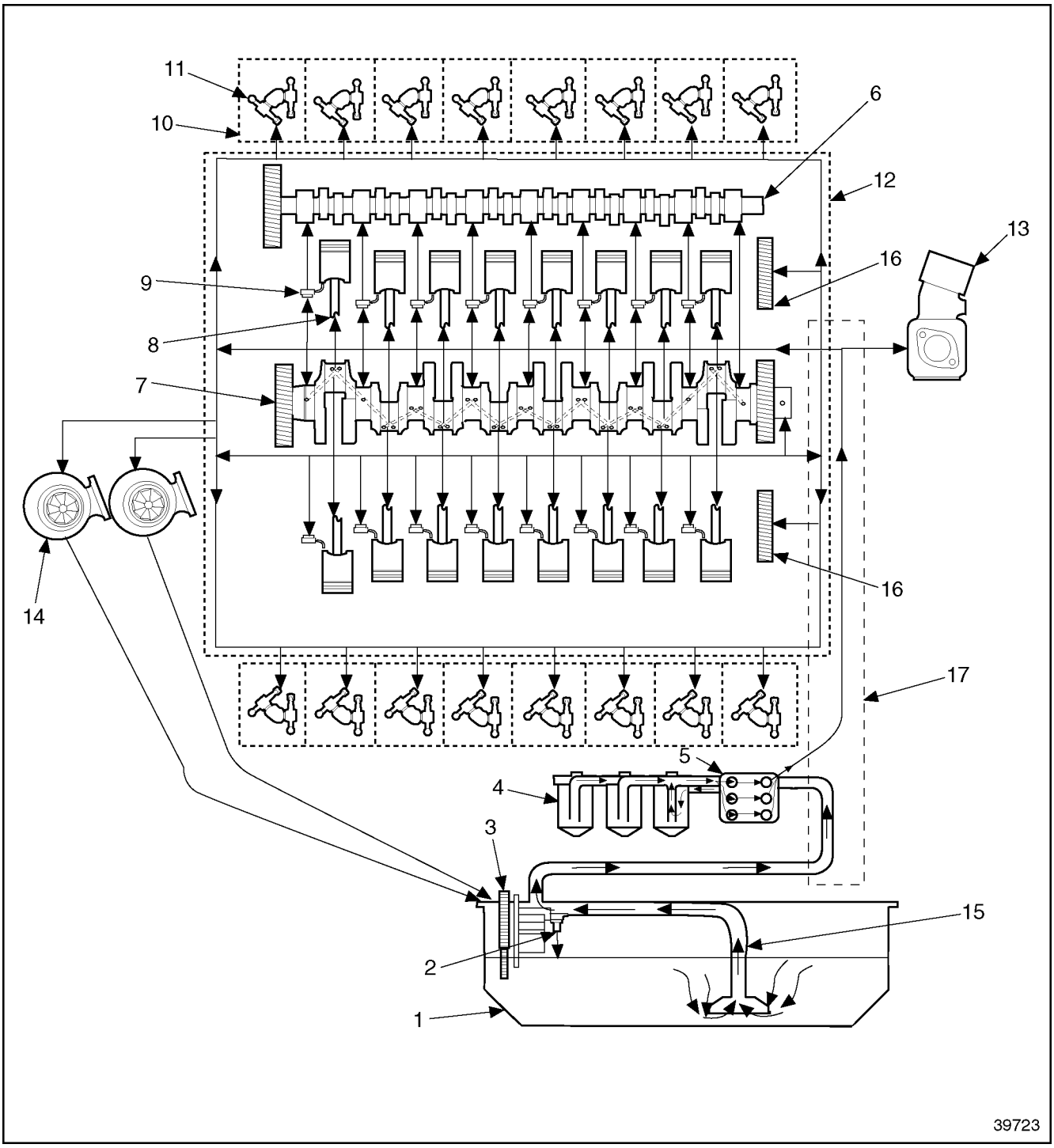

1. Oil Pan
2. Oil Pressure Relief Valve
3. Oil Pump Assembly
4. Oil Filters (with Internal Bypass Valve)
5. Oil Cooler Asm
6. Camshaft
7. Crankshaft
8. Piston & Connecting Rod Asm
9. Piston Oil Nozzle
10. Cylinder Heads
11. Rocker Arm Assemblies
12. Cylinder Block
13. Air Compressor Asm
14. Turbocharger (2)
15. Oil Pick-up Tube & Screen Asm
16. Idler Gears (2)
17. Transfer Housing

Figure 8-2 Series 2000 16V Lubrication System

 Copyright © 2001 DETROIT DIESEL CORPORATION

8.2 ENGINE OIL SELECTION

The selection of the proper engine oil for use in the Series 2000 engines is dependent upon fuel quality, oil drain interval, and the geographic location of engine operation. At the present time, no single industry performance definition exists worldwide which can address each of these criteria. The general performance requirements for applications operating with the recommended fuel quality are listed in Table 8-1.

Performance	Oil
Performance Category 1	API CG-4 or ACEA E2-96
Performance Category 2	ACEA E3-96

Table 8-1 Engine Lubricating Oil Performance Requirements

Engine oils meeting ACEA E1-96, API CF, or API CF-4, or a combination of these specifications do not meet the engine performance requirements of Series 2000 engines. However, these engine oils may be used when the oils listed in Table 8-1 are not available. The use of these engine oils may require a reduction in oil drain interval.

Engine oils included in the MTU publication A001061/18E, "Fluids and Lubricants Specifications," have provided satisfactory performance in similar engines and may be used in Series 2000 engines if the drain intervals listed in this brochure are followed. This publication is available from MTU and DDC.

Circumstances requiring the use of engine oils not meeting these requirements or not in A001061/18E, "Fluids and Lubricants Specifications," should be reviewed by MTU or DDC before use.

Engine oils used in Series 2000 engines must meet the chemical and physical properties, and bench test requirements listed in Table 8-2 and the performance requirements listed in Table 8-1.

Characteristic	Test Method	Limit
Alkalinity (TBN)*	ASTM D 2896	> 8.0 mg KOH/g
Zinc *	ASTM D 5185 or equivalent	> 700 ppm
Shear Stability *	ASTM D 3942 or CEC-L-14-A-88	Stay in Grade
Deposit Test †	MTV 5040	100 mg maximum
Evaporative Loss (NOACK)‡	ASTM D 5800 or CEC-L-40-A-93	15%, maximum

* Use of an oil outside this range requires a field test with written review and approval by DDC and MTU.
† Required for multigrade oils used in closed crankcase applications.
‡ Applies to Category 1 oils only.

Table 8-2 Engine Lubricating Oil Chemical Physical Properties and Bench Test Requirements

All information subject to change without notice.
7SA2000 0103 Copyright © 2001 DETROIT DIESEL CORPORATION

8.2.1 VISCOSITY GRADE SELECTION

The primary criteria for viscosity grade selection is based on the ambient temperature for engine start and operation, engine application, and oil availability. Depending upon the application, Series 2000 engines will operate satisfactorily with either single or multigrade oils when matched to the proper performance criteria. The recommended viscosity grades for the minimum ambient temperature conditions are show in the following illustration (see Figure 8-3).

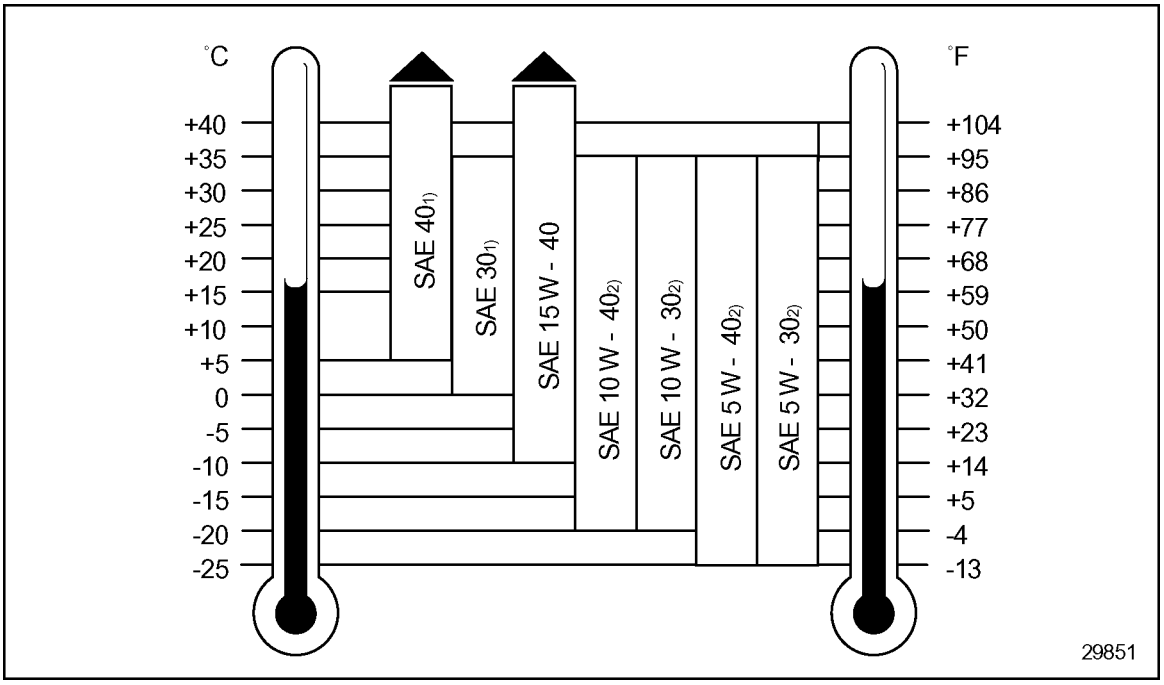

1. SAE 30 and 40 grade oils must contain additive technology which meets the recommended ACEA or API performance listed in Table 8-1. That performance may be based on equivalent multigrade formulations, provided the multigrade oil does not contain a multifunction viscosity modifier.
2. W-30 or W-40 must meet Performance Category 2 requirements.

Figure 8-3 Viscosity Grade Selection

Single grade SAE 40 oils are preferred where crankcase ventilation is closed to the atmosphere and ambient temperature is above 0°C (marine and certain industrial engine applications). Multigrade oils are recommended in open crankcase ventilation systems, such as nonroad heavy-duty vehicle applications. Multigrade oils used in closed crankcase ventilation systems must pass the MTU test method MTV 5040, "Deposit Forming Tendency of Engine Oils."

8.2.2 OIL DRAIN INTERVAL

The recommended oil drain intervals when operating with fuel containing normal levels of sulfur (below 0.5 *%) are* listed Table 8-3.

Oil drain intervals are the shorter of the recommended engine operating hours shown or one year. Extension of these oil drain intervals is not recommended.

 Copyright © 2001 DETROIT DIESEL CORPORATION

Series 2000 Engines	
Performance Category	**Construction / Industrial**
1	500 hours or 1 year
2	1000 hours or 1 year
Marine Oil	500 hours or 1 year

Table 8-3 Series 2000 Engine Oil Drain Intervals

8.2.3 THE USE OF HIGH SULFUR FUEL

The use of fuel with a sulfur content above 0.5 % requires the use of an engine oil with a TBN (ASTM D 2896) above eight and a reduction in oil change interval to one half the normal oil drain recommendation or, if used oil analysis is performed, a reduction to one half the new oil TBN. See Figure 8-4 for new oil TBN selection and the minimum used oil TBN at oil drain. The use of fuel with a sulfur content above 1.0 % may require a further shortening of the drain interval and other special considerations. Refer to the section 8.2.4, "Engine Oil Recommendations for Special Circumstances."

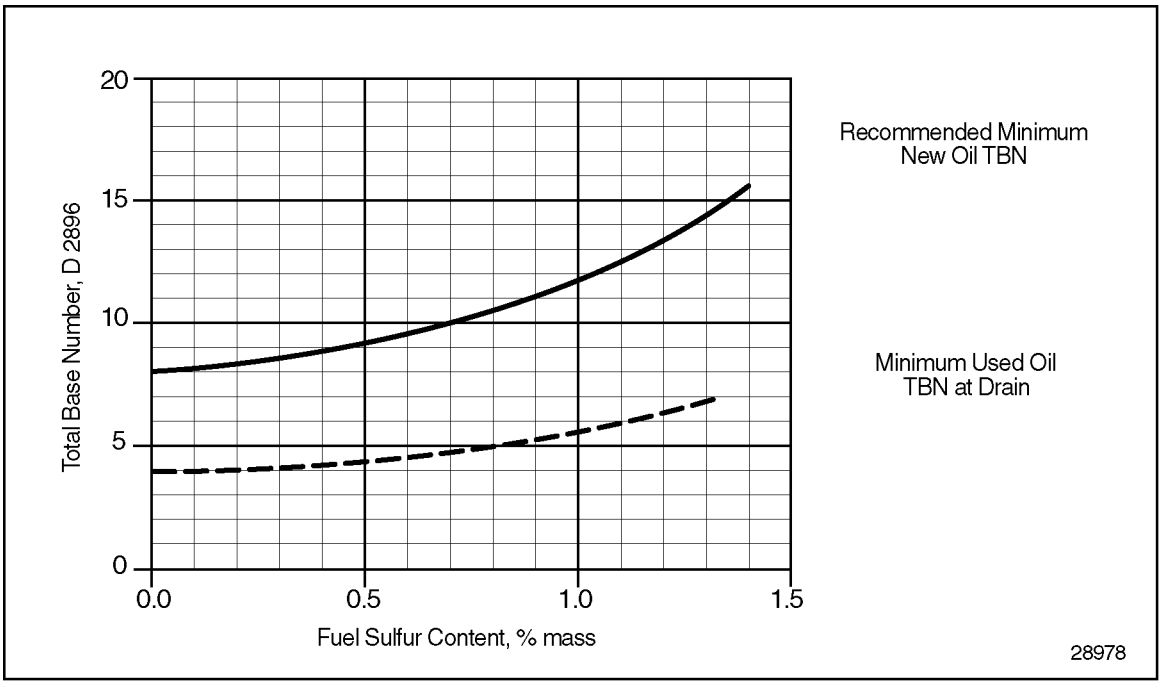

Figure 8-4 New Oil Total Base Number Selection and the Minimum Used Oil Total Base Number at Oil Drain

In addition to TBN, other factors such as engine condition and operational requirements may also determine proper oil service life.

All information subject to change without notice.
7SA2000 0103 Copyright © 2001 DETROIT DIESEL CORPORATION

8.2.4 ENGINE OIL RECOMMENDATIONS FOR SPECIAL CIRCUMSTANCES

Although these engine oil requirements are intended to cover most engine operating conditions with available engine oils, there may be circumstances where these requirements cannot be satisfied. For example, a new engine application, fuel type, or new engine oil technology may require the use of an engine oil not covered in these requirements. In these circumstances it will be necessary to demonstrate the compatibility of the lubricant with the engine in that application.

The following section outlines a recommended field test plan which may be used by an oil company or a customer for this purpose.

Field Testing Guidelines

The performance of the test oil is compared with the performance of a reference oil which meets Series 2000 engine oil requirements. The field testing guidelines are listed in Table 8-4.

Test Criteria	Test/Inspection/Monitoring Guideline
Number of units to be tested - Construction and Industrial	One unit on reference oil and three units on test oil
Test Duration	5000 hours
Oil Drain and Filter Change Interval	
Category 1 oil Category 2 oil	650 hours 1300 hours
Pressure drop (dP)	Pressure drop (dP) should be monitored across the oil filter during service intervals; dP should not be higher than 65 kPa.
Engine and oil condition monitoring End of test engine inspection of components	Used oil analysis every 100 hours Pistons for crownland and ring belt deposits Ring face wear Cylinder liner bore polish in % of the ring travel area Bearings for overlay removal and wear reported in % area Rocker covers and oil pan for sludge
Satisfactory performance	Demonstrated when the inspected components condition are equivalent or better on average with the candidate test oil than with the reference oil.

Table 8-4 Field Testing Guidelines

It is recommended that the results of such field testing be reported to DDC and MTU engineering, and a written confirmation of the claimed performance be obtained.

 Copyright © 2001 DETROIT DIESEL CORPORATION

8.2.5 USED OIL ANALYSIS

A used oil analysis program is recommended for monitoring crankcase oil in

Series 2000 engines. Used oil samples should be taken at a minimum when the oil is changed, more often depending upon the engine service and application. The tests and limits listed in Table 8-5 indicate when a single oil sample analysis should be considered abnormal without other historical information about the engine or the oil. An abnormal result under these circumstances indicates a need for an immediate investigation and correction of the abnormality identified. The engine should never be disassembled based on a single used oil analysis.

Testing For:	Test Methods	Condition Measured	Limit Value*
Viscosity at 100°C	ASTM D445	Engine & Oil	
Maximum mm^2/s	DIN 51562	--	SAE 30, SAE 5W-30 SAE 10W-30 15.0 SAE 40, SAE 10W-40 SAE 15W-30 18.0
Minimum mm^2/s	--	--	SAE 30, SAE 5W-30 SAE 10W-30 9.0 SAE 40, SAE 10W-40 SAE 15W-30 12.0
Pentane Insolubles, % mass	ASTM D893 DIN 51365	Engine Combustion	2.5 Maximum
Total Base Number	ASTM D2896 ISO 3771	Oil	4.0 Minimum or 50% of new oil value
Water, %Vol, Max.	ASTM D1744	Engine	0.2
Fuel Dilution, % Vol.	ASTM D3524	Engine	2.5 Maximum
Glycol, Max.	ASTM D2982 DIN 51375	Engine	Negative
Flash Point, COC, °C	ASTM D D92 ISO 2592	Engine & Oil	190 Minimum

* The Limit Values are based on a single oil sample taken by an accepted sampling method. These values indicate the need for an immediate oil change, but do not indicate internal engine malfunctions requiring engine teardown.

Table 8-5 Used Lubricating Oil Analysis Abnormal Condition Limits

Oil Sample Extraction and Analysis

The tool to use to extract an oil sample and have it analyized is the Detroit Diesel Power Trac® Oil Analysis Kit.

Use the directions from the Power Trac® Oil Analysis Kit. Take an oil sample and mail it, using the preaddressed container, to the Power Trac analysis center. Analysis reports are available within 24 hours of sample receipt.

All information subject to change without notice.
7SA2000 0103 Copyright © 2001 DETROIT DIESEL CORPORATION

8.2.6 OIL FILTERS

This information should be available when the new fluids bulletin is available.

Remote Oil Filters

A remote oil filter option is available for 8V and 12V engines. The minimum hose size requirements for the 8V are listed in Table 8-6.

Length of Hose	Minimum Diameter
Up to 800 mm (32 in.)	25 mm (#16)
Up to 2000 mm (79 in.)	32 mm (#20)
Up to 4165 mm (163 in.)	38 mm (#24)

Table 8-6 Guide for Minimum Remote Filter Hose Sizes - 8V

8.3 TESTING REQUIREMENTS

Section X of the EPQ form must be completed.

A pressure differential test at the engine must be performed at full load and rated speed when a remote mounted oil filter is installed.

 Copyright © 2001 DETROIT DIESEL CORPORATION

THIS PAGE INTENTIONALLY LEFT BLANK

 Copyright © 2001 DETROIT DIESEL CORPORATION

9 ELECTRICAL SYSTEM

The purpose of the electrical system is to provide the energy required to start the engine, charge the batteries, and supply power to the accessories and the Detroit Diesel Electronic Controls (DDEC®) system.

9.1 ELECTRICAL SYSTEM DESCRIPTION

The electrical system (see Figure 9-1) consists of the following components:

- ☐ Cranking motor and solenoid
- ☐ Battery charging alternator (Alternator)
- ☐ Voltage regulator (normally integral to the alternator)
- ☐ Storage battery(s)
- ☐ Ignition switch
- ☐ DDEC

 Copyright © 2001 DETROIT DIESEL CORPORATION

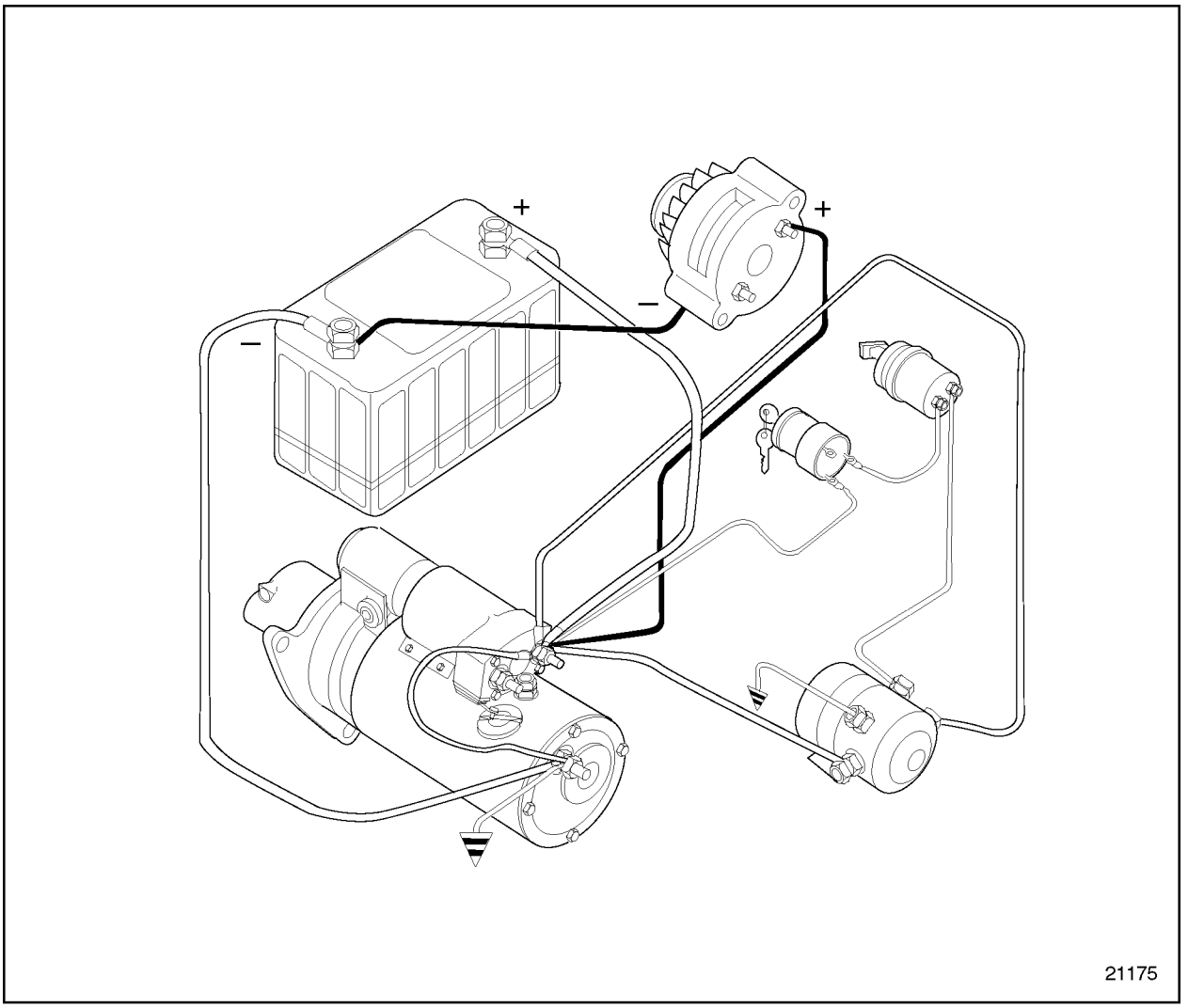

Figure 9-1 Engine Electrical System

The battery stores electrical energy. The starter converts electrical energy from the battery into mechanical energy, then transfers the mechanical energy to the engine as a rotational force. The alternator converts mechanical energy from the engine to electrical energy. This electrical output of the alternator is transferred to the battery to be stored for later use. The wiring links the battery to the starter, and the alternator to the battery. The DDEC system power source *must be* directly from the battery.

All information subject to change without notice.
7SA2000 0103 Copyright © 2001 DETROIT DIESEL CORPORATION

9.2 INSTALLATION GUIDELINES

The engine electrical system with properly matched parts provides a balanced system which should meet all operating requirements.

9.2.1 BATTERY

The battery is a device for storing electrical energy and converting chemical energy into electrical energy. Nickel cadium and lead acid batteries may be used. If a nickel cadium battery is used the battery manufacturer's guidelines should be used.

Four basic types of lead acid batteries are currently available:

- ☐ Filler cap batteries
- ☐ Semi-maintenance free batteries
- ☐ Maintenance-free batteries
- ☐ Deep cycle batteries

CAUTION:

To avoid injury from battery explosion or contact with battery acid, work in a well-ventilated area, wear protective clothing, and avoid sparks or flames near the battery. Always establish correct polarity before connecting cables to the battery or battery circuit. If you come in contact with battery acid:

- ☐ **Flush your skin with water.**
- ☐ **Apply baking soda or lime to help neutralize the acid.**
- ☐ **Flush your eyes with water.**
- ☐ **Get medical attention immediately.**

Filler Cap Batteries

Filler cap batteries are lead-acid with a high degree of antimony in the grid alloy. These batteries require frequent servicing especially adding water, and cleaning salts and corrosive deposits from the terminal posts.

Semi-maintenance Free Batteries

Servicing is reduced in the semi-maintenance free batteries due to reduced amount of antimony in the grid alloy. Water must still be added periodically. Salt and corrosive deposits must be cleaned from the terminal posts.

 Copyright © 2001 DETROIT DIESEL CORPORATION

Maintenance-free Batteries

Maintenance-free batteries use lead-calcium grid construction without antimony. These batteries never need water. Terminal posts do not tend to accumulate salt and corrosive deposits since there are no filler caps to leak acid fumes, so cable inspection and cleaning are infrequent.

Deep Cycle Batteries

Deep cycle batteries are not recommended for engine starting.

Battery Capacity

The minimum battery capacity recommended for acceptable engine cranking is listed in Table 9-1.

Engine Model	System Voltage	Minimum Battery Ratings	
		SAE Cold Cranking AMPS (CCA) @ 0°F (-17.8°C)	
		Above 32°F (0°C)	Below 32°F (0°C)
Series 2000	12V	NA	NA
	24VR, 32VR	950	1250

* If two cranking motors are used, battery recommendation is for each motor.

Table 9-1 Minimum Battery Capacity for Acceptable Engine Cranking

Battery Mounting and Location

Battery mounting boxes, or carriers support the batteries and protect them from excess vibration, road splash and other environmental conditions. The battery carrier may be heated or cooled to keep the battery at optimum operating temperature, 27°C (80°F).

The recommended battery carrier designs are:

- ☐ Top picture frame
- ☐ Top crossbar
- ☐ Top mid-frame
- ☐ Angled J-bolt

See Figure 9-2.

All information subject to change without notice.
7SA2000 0103 Copyright © 2001 DETROIT DIESEL CORPORATION

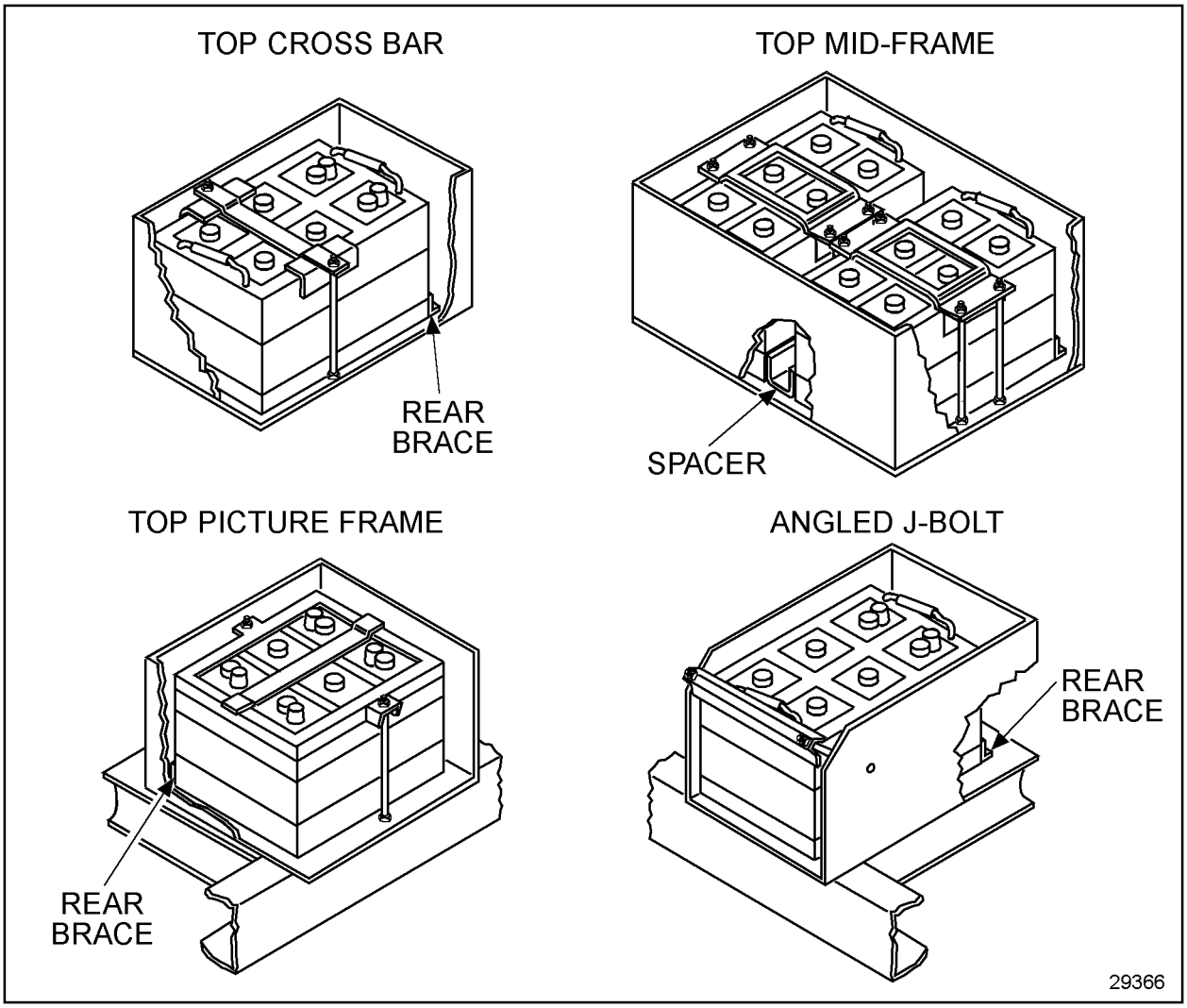

Figure 9-2 Battery Retainers

CAUTION:

To avoid injury from battery explosion or contact with battery acid, do not place a charging battery near arcs, sparks, or open flame. Batteries give off gasses that can be ignited by a spark or flame, and the resulting explosion can cause the battery case to rupture.

The battery should be located away from flame or spark source, road splash, and dirt but as close as possible to the starting motor. The battery should be located in a place with minimum vibration and easy access for visual inspection and maintenance.

 Copyright © 2001 DETROIT DIESEL CORPORATION

Batteries mounted between frame rails, either inside or above the rails, experience minimum vibration. Batteries mounted outside, but close and parallel to frame rails, experience greater vibration. Both of these locations are recommended for all applications. Cantilever battery mountings are not recommended.

9.2.2 CRANKING MOTOR

The cranking motor should be installed so that the solenoid is above horizontal.

Mounting the cranking motor with the solenoid above horizontal allows any accumulated moisture to drain out of the shift housing through the open nose housing. Moisture and condensation may remain trapped and accumulate in the area of the solenoid and shift linkage and damage the solenoid if the solenoid is below horizontal (see Figure 9-3).

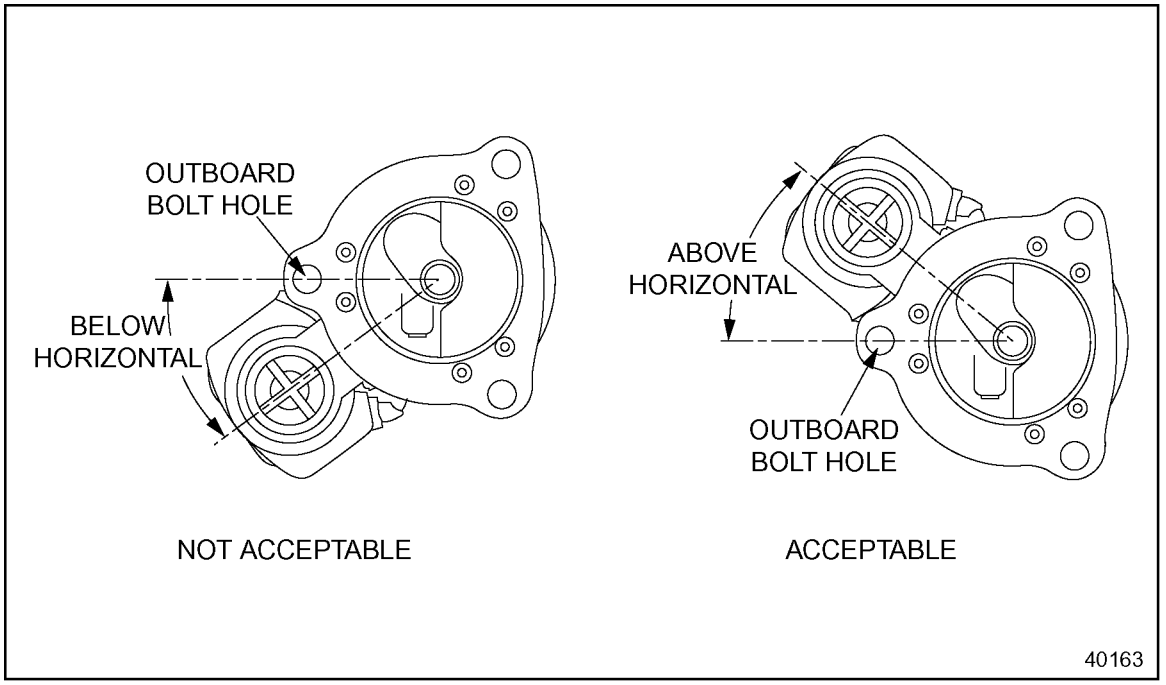

Figure 9-3 Starter Indexing

Excessive engine starting may cause the starter to overheat and may reduce its life.

Starting time should not exceed 30 seconds, with a two minute cool down interval between starting periods.

Dual starters may be required for certain applications with 12V and 16V Series 2000 engines.

NOTE:
Dual starters are not available on the SAE #1 flywheel housing.

All information subject to change without notice.
7SA2000 0103 Copyright © 2001 DETROIT DIESEL CORPORATION

Factors to consider include:

- ☐ Ambient temperature
- ☐ Oil viscosity
- ☐ Parasitic loads
- ☐ Cranking circuit resistance
- ☐ Starting aids

The Cranking Circuit

The typical cranking circuit will include an auxiliary solenoid switch between the cranking switch and the starter solenoid terminals. This switch is sometimes referred to as the "magnetic switch" or "mag switch."

Starter solenoid current draw can exceed 90 Amps in 12 V systems and 60 Amps in 24 V systems. The mag switch is used to isolate the starter switch contacts from this heavy current draw.

9.2.3 ALTERNATOR

The battery-charging alternator provides a source of electrical current for maintaining the storage battery in a charged condition. The alternator also supplies sufficient current to carry any other electrical load requirements up to the rated capacity of the alternator.

Modern battery charging alternators are three phase AC machines with solid state, self-contained rectifiers and regulators. Even though these alternators are referred to as “one wire systems", a separate ground return line should be used from the alternator to the battery.

Because the regulator is contained within the alternator, relying on the frame for ground return can result in incorrect voltage sensing by the regulator and, as a result, incorrect alternator output.

See Figure 9-4 for parts of the battery charging alternator.

 Copyright © 2001 DETROIT DIESEL CORPORATION

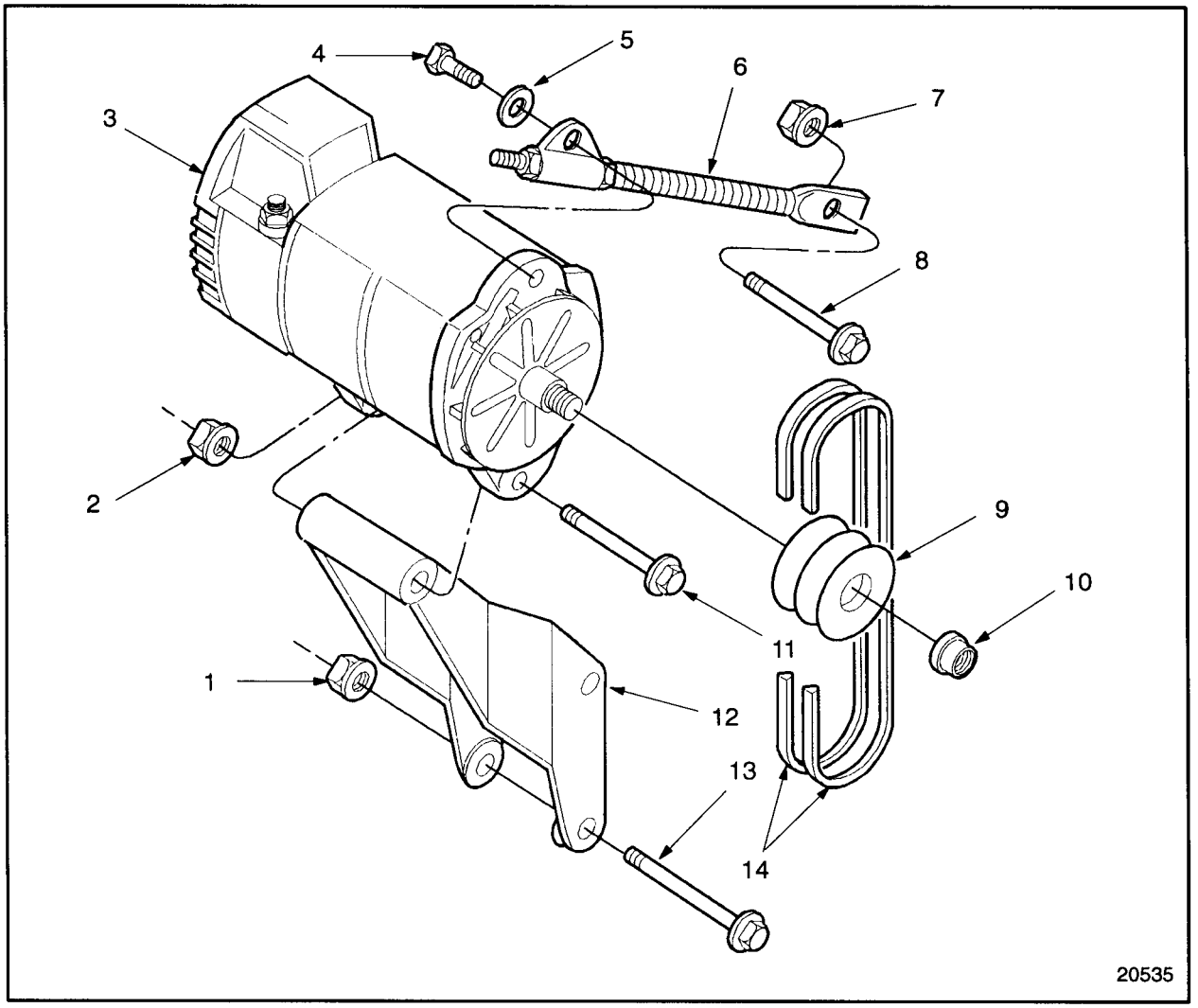

1. Nut
2. Nut
3. Alternator
4. Bolt, Alternator-to-Adjusting Rod
5. Washer
6. Alternator Adjusting Rod
7. Nut
8. Bolt, Adjusting Rod-to-Engine
9. Pulley, Alternator Drive
10. Locknut
11. Bolt, Alternator-to-Mounting Bracket
12. Mounting Bracket
13. Bolt, Mounting Bracket-to-Engine (2)
14. Drive Belts

Figure 9-4 Typical Alternator and Related Parts Location

All information subject to change without notice.
7SA2000 0103 Copyright © 2001 DETROIT DIESEL CORPORATION

Alternator Mounting

The typical mounting assembly includes a mounting bracket that matches the alternator mounting lugs, an adjusting strap and the associated hardware.

The following guidelines are provided for correct alternator mounting:

NOTICE:
Do not mount the alternator near the exhaust manifold. Mounting near the exhaust manifold could overheat the alternator and the regulator.

- ☐ A mounting location close to the engine block minimizes mounting bracket overhang.
- ☐ A mounting location not subject to resonant vibration is best.
- ☐ The alternator mounting assembly should support the alternator rigidly so that the alternator pulley grooves are in the same plane as the driving pulley grooves on the engine. Provision must be made for belt tension adjustment.
- ☐ Drive and driven pulleys must be in parallel and angular alignment to prevent short belt life or loss of belt.
- ☐ Anchor the adjusting strap and mounting brackets to a rigidly fixed heavy section. Motion between the mounting bracket and adjusting strap can create an unacceptable vibration.
- ☐ Follow alternator supplier mounting guidelines for minimum mounting requirements.

Incorrect mounting can result in:

- ☐ Improper alignment of pulleys
- ☐ Excessive vibration of mounting assembly components

Improper alignment of pulleys causes excessive belt or pulley wear. Society of Automotive Engineers (SAE) recommended practice should be followed with respect to pulley alignment and tolerances. The pulley groove must be concentric with the bore and the pulley should be adequately balanced. Fabricated sheet metal pulleys are not recommended for applications with heavy belt loads. Belt resonance will result in short belt life. Contact the belt manufacturer if belt resonance is a problem.

Excessive vibration of mounting assembly components can cause failure of the mounting bracket, the adjusting strap, the alternator mounting lugs, or other alternator components. An effective bracket must stay firmly attached to the engine.

 Copyright © 2001 DETROIT DIESEL CORPORATION

9.2.4 WIRING

Care must be taken to ensure that all cables and connections are clean and in good operating condition. One faulty or dirty connection may reduce electrical energy transfer throughout the entire electrical system.

The wiring system is governed by certain characteristics--the vehicle or chassis, system voltage, starting motor type, batteries used, and location. These characteristics establish proper routing, cable length and size, insulation, terminals, routing clamps, loom or conduit requirements, and connections.

The following guidelines are provided for new installations:

- ☐ Rope stranded copper cable is recommended for #0 or larger cable sizes because of its added flexibility.
- ☐ A full copper circuit is recommended for all installations because it maintains the lowest resistance and is the most trouble-free.
- ☐ Good cable routing is not too tight or loose, is properly supported, and avoids excessive heat, abrasion, and vibration.
- ☐ Conduit or loom should be considered to protect the wiring when extreme heat or abrasion cannot be avoided.
- ☐ Use die-cast lead alloy terminals for post-type batteries.
- ☐ Use sealed terminals when sealed terminal batteries are available.
- ☐ Use ring terminals for connections other than to the battery.
- ☐ Use clamps to support the battery cable every 24 inches, and to relieve strain at battery and motor terminals, around corners, and at other stress points.
- ☐ Strip frame area of paint, where ground connection is made, to assure proper connections.
- ☐ Coat connections with a corrosion inhibitor.
- ☐ Battery cable connections to the frame should have hardened steel flat washers with a locking nut.

NOTE:
DDC does not approve the use of external or internal tooth lock washers for battery cable electrical connections.

- ☐ Starter circuit resistance should not exceed 0.002 Ω in a 24 volt circuit.

9.2.5 GROUNDING REQUIREMENTS

The preferred method of ground return is to use a copper cable from the ground side of the starter or alternator back to the battery. The cable size should be the same as the supply cable coming from the battery. When calculating the correct cable size, the distance from the battery to the starter or alternator as well as the ground return distance must be used to determine the total cable resistance or system voltage drop.

All information subject to change without notice.
7SA2000 0103 Copyright © 2001 DETROIT DIESEL CORPORATION

10 MOUNTING SYSTEMS

The purpose of the engine mounting system is to properly support the engine and its driven component as well as isolating vibrations between the engine and supporting structure. This section describes the functions, design, and application of the mounting system for the Detroit Diesel Series 2000 engine. For more extensive discussion and details refer to Detroit Diesel Engineering Bulletin No. 45, *Engine Mounting*, (18SA0350).

10.1 MOUNTING SYSTEM DESCRIPTION

The major functional requirements of an engine mounting system are:

- ☐ To adequately support the engine and driven components
- ☐ To control and reduce the engine motion, both vibratory and translational
- ☐ To control external shock or transient forces to prevent physical contact between the engine and the application
- ☐ To limit the bending moments at the cylinder block-to-flywheel housing (RFB) within the maximum values specified for the engine and application
- ☐ To prevent twisting loads on the cylinder block and the entire packaged assembly

The three major mounting system configurations commonly used are:

- ☐ Three-point
- ☐ Four-point
- ☐ Five– or Six-point

Flexible mounts and solid mounts represent the different mounting system configurations.

The vibration characteristics of the total installation will depend on the combined weight of the engine and installation, the rigidity of the mounting system, and the resonant characteristics of the supporting structure.

Most mount manufacturers have computer analysis programs which determine the proper mounts for specific applications.

 Copyright © 2001 DETROIT DIESEL CORPORATION

10.1.1 THREE-POINT MOUNTING

Three-point mounting is based on the principle that three points define a plane and therefore engine block and driven machinery twisting will not occur. Three point mounting is required for off highway and rough terrain mobile applications, but it can also readily be used in stationary applications. It is accomplished with one mounting point at the front and two at the rear. The front mount, which is a trunnion mount supplied by DDC, provides support vertically and transversely but will not restrain torsionally or axially, so within certain limits no twisting loads can be induced. The actual rotation of the trunnion is limited to < 3° therefore the twisting of the frames should still be limited to prevent locking up of the trunnion support. The trunnion support includes a rubber bushing which has some vibration isolation. At the rear of the engine a bracket is attached to each side of the flywheel housing with the driven mechanism flange mounted to the engine.

See Figure 10-1 for a three–point mounting with front trunion and rear brackets and the bending moment less than 1000 ft lb at RFB.

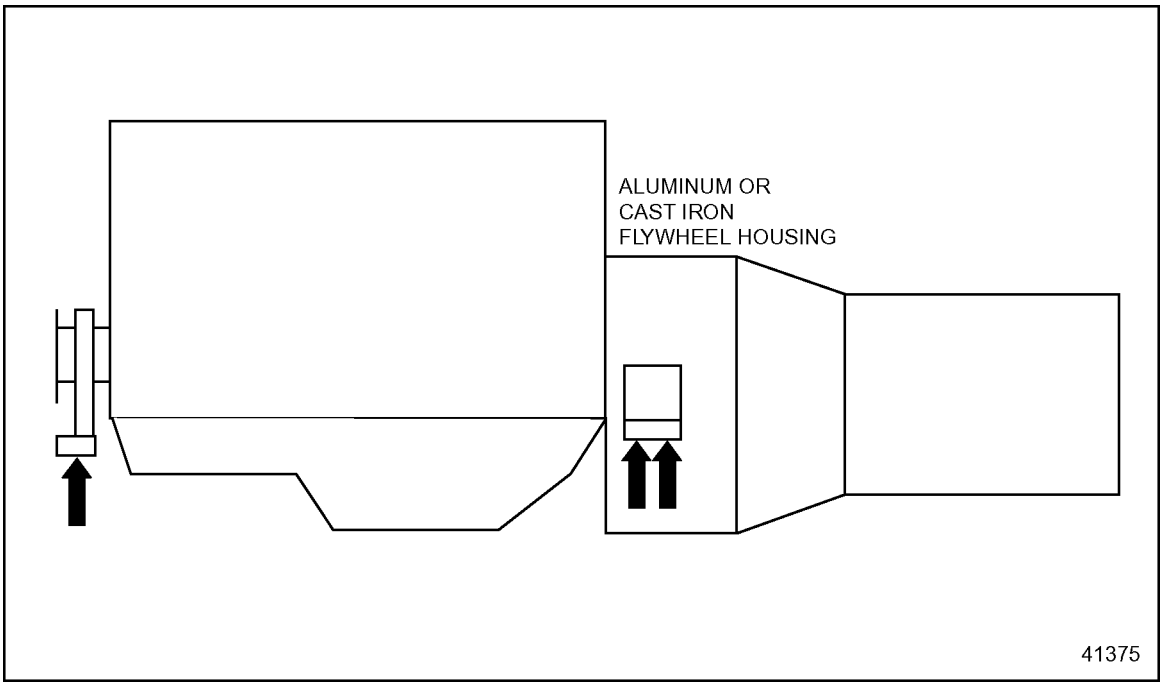

Figure 10-1 Three–point Mounting with Front Trunnion and Rear Bracket

See Figure 10-2 for a three–poiont mounting with front trunnion and set of rear cradle mounts. The support point is calculated for zero bending moment at RFB.

All information subject to change without notice.
7SA2000 0103 Copyright © 2001 DETROIT DIESEL CORPORATION

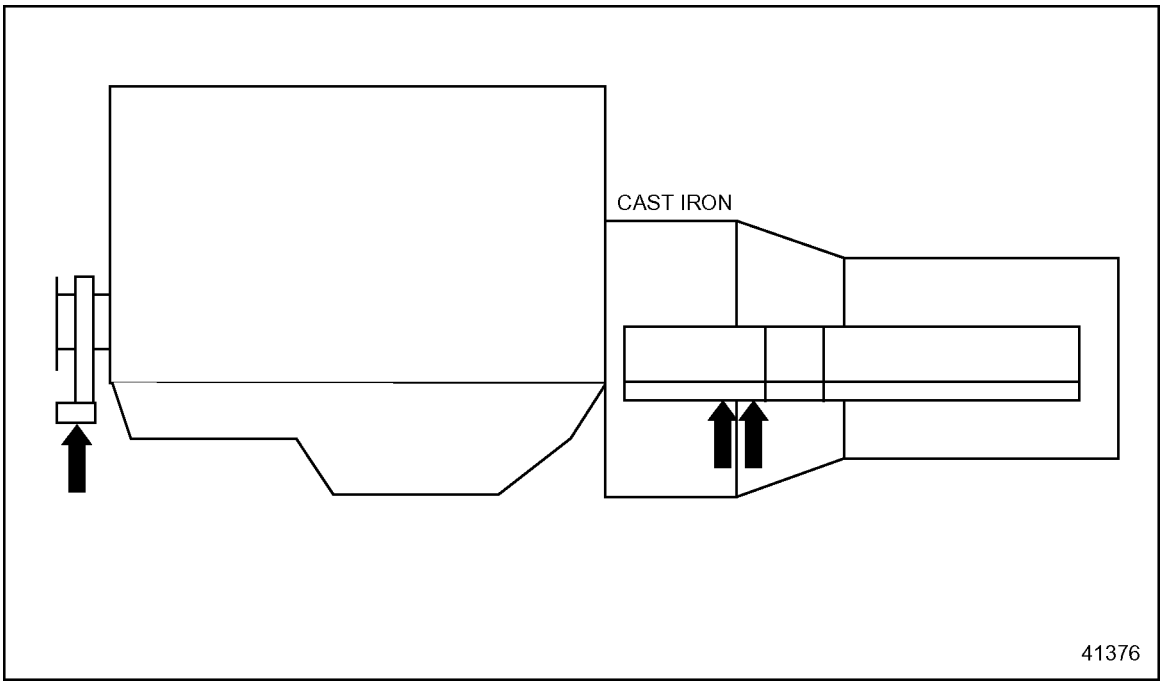

Figure 10-2 Three–point Mounting with Front Trunnion and a Set of Rear Cradle Mounts

NOTE:
This and all driven equipment attached directly to the engine must be analyzed for bending moment at the rear face of the block. If the bending moment exceeds the limit of 1000 ft.lb, then the rear mount must consist of a fabricated cradle between the engine flywheel housing and the driven mechanism and the support point determined for a bending moment as close to zero as possible. Refer to section10.6 for details.

The rear mounts should restrain motion in all six degrees of freedom and provide for the necessary torque reaction. Isolation mounts should not be used under the trunnion mount but can be used under the rear mounting brackets if desired.

10.1.2 FOUR-POINT MOUNTING

Four-point mounting is more suitable for stationary applications like generator sets, air compressors, irrigation pumps, etc. in which dynamic frame or base bending is not expected to occur. The front cover of the Series 2000 engines has a mounting pad on each side as does the flywheel housing, so that four mounting brackets can be applied. Sometimes the rear mounts are attachable to the sides of the driven component, but this depends on the resulting bending moment at the rear face of the cylinder block (RFB). The brackets meant for front cover and flywheel housing attachment are available for the Series 2000 engine as listed in Table 10-1. The four-point mounting system is readily adaptable to applying resilient mounts. SeeFigure 10-3.

 Copyright © 2001 DETROIT DIESEL CORPORATION

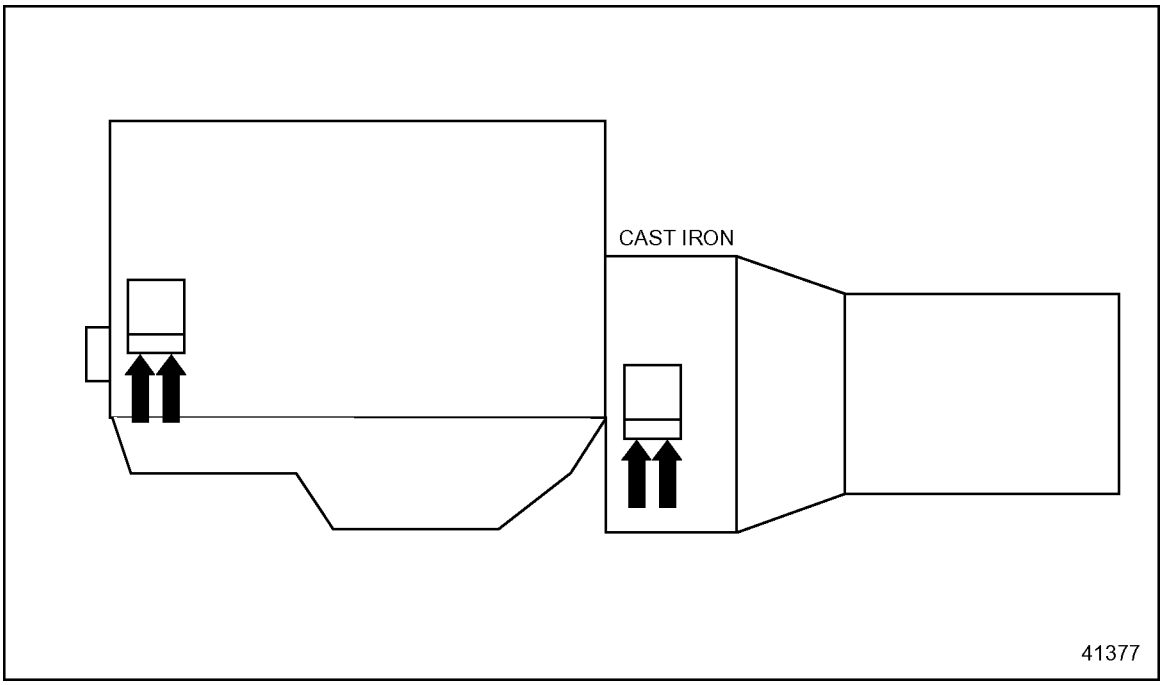

Figure 10-3 Four–point Mounting with Front and Rear Bracket Sets

NOTE:
When installing and securing four–point mounts, ensure alignment and shimming is done first and that no twisting or binding can occur. Ensure all bolt holes available are utilized. Use high grade bolts and flat washers and apply recommended torque to secure mounts flat and square to the engine and its foundation.

NOTICE:
Ensure the bolts are torqued correctly. Inadequately torqued bolts will cause fretting and wear under the bolt heads. The subsequent looseness will cause the unit to vibrate excessively.

10.1.3 FIVE-POINT AND SIX-POINT MOUNTS

Five– and six– point mounting is used in stationary applications where there is a heavy single or two bearing generator, air compressor, or power transfer gear attached. Sometimes railroad locomotives with very stiff, heavy foundations also use this type of mounting. In this system there could be the same configuration as the three– and four–point system with the addition of two mounts on the driven device. Near perfect alignment is required between the engine and the driven member, otherwise binding could occur in rotating shafts, couplings and bearings. The five– or six–point system should not be used in mobile applications subject to twisting and bending because frame flexibility would be detrimental . This system requires solid mounting to the frame or subbase. The subbase, however, can be resiliently mounted if done properly. See Figure 10-4 for five–point mounting and see Figure 10-5 for six–point mounting. See Figure 10-6 for resilient mounting of the subbase.

All information subject to change without notice.
7SA2000 0103 Copyright © 2001 DETROIT DIESEL CORPORATION

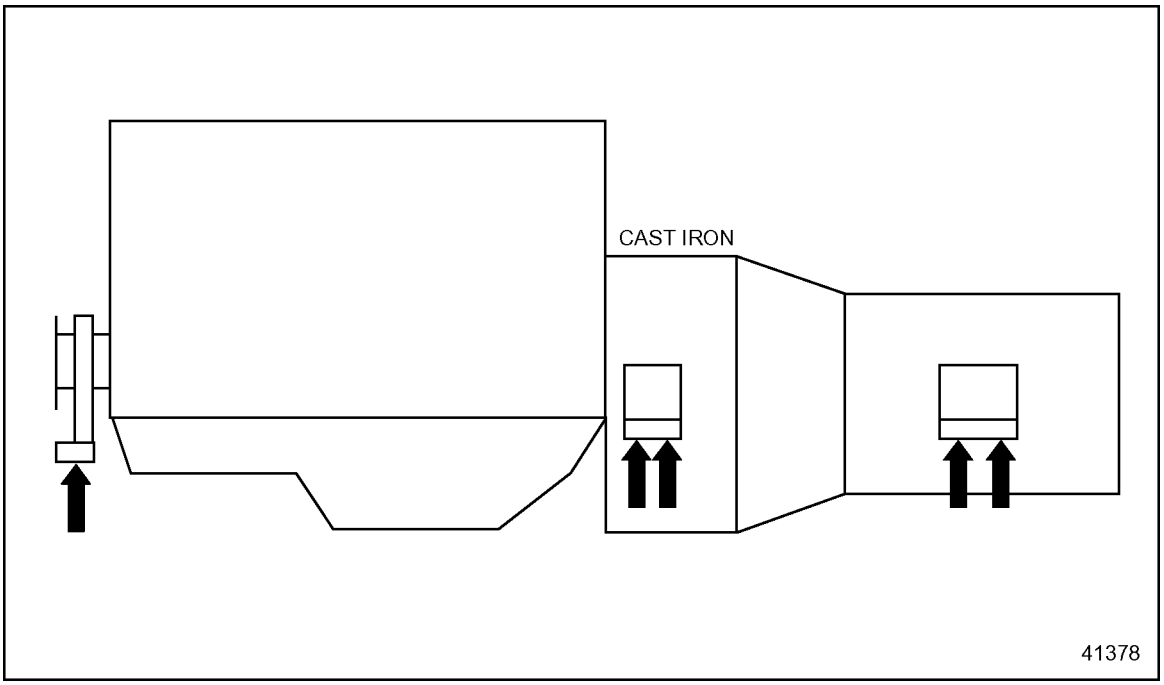

Figure 10-4 Five–point Mounting with Front Trunnion and Two Sets of Rear Brackets

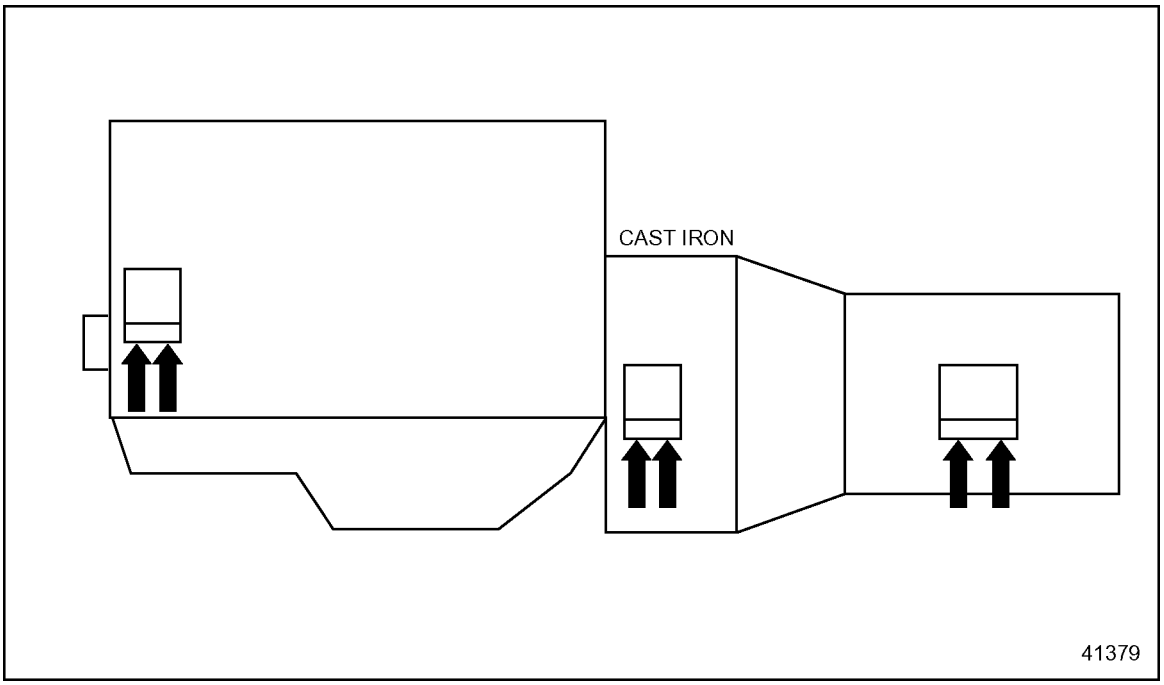

Figure 10-5 Six–point Mounting with Front and Rear Bracket Sets

 Copyright © 2001 DETROIT DIESEL CORPORATION

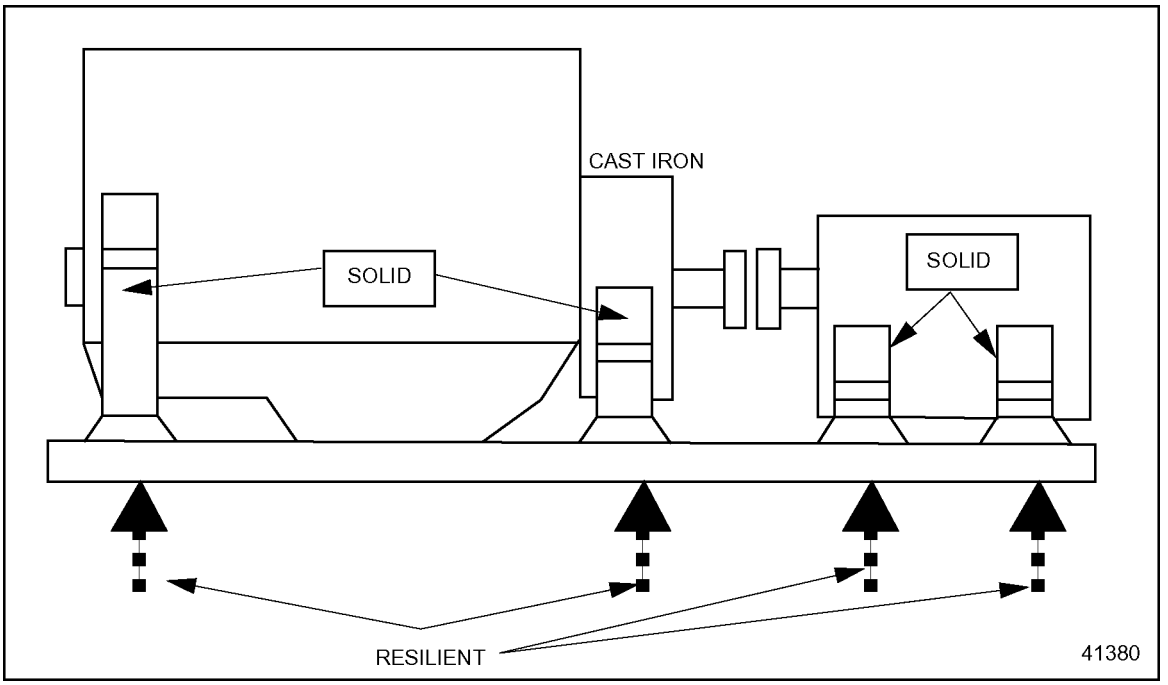

Figure 10-6 Remote Driven, Solid Mount on Subbase with Resilient Mounting of the Subbase

NOTE:
The foundation that the subbase is mounted to should be isolated from the building or structure and have a mass of at least 1-1/2 times the that of the power unit. If this is not the case, then the sub -base should be resilient mounted. The resilient mounts supporting the frame or subbase are not evenly distributed along the base but should be placed strategically at locations near the engine and driven equipment supports. See DDC Engineering Bulletin 42, *Engine-Generator Mounting Recommendations* (18SA0211).

NOTE:
When installing and securing five-point and six–point mounts, ensure alignment and shimming is done first and that no twisting or binding can occur. Ensure all bolt holes available are utilized. Use high grade bolts and flat washers and apply recommended torque to secure mounts flat and square to the engine and its foundation.

NOTICE:
Ensure the bolts are torqued correctly. Inadequately torqued bolts will cause fretting and wear under the bolt heads. The subsequent looseness will cause the unit to vibrate excessively.

All information subject to change without notice.
7SA2000 0103 Copyright © 2001 DETROIT DIESEL CORPORATION

10.2 SOLID MOUNTING SYSTEMS

Solid mountings are used when engine itself is an integral part of the machine structure.

In any solid mounting arrangement, consider the following :

- ☐ Make the mounting brackets and mounting base as rigid as possible.
- ☐ Alignment of the engine and the machine being driven must be carefully controlled to minimize loading on the coupling, flywheel, and flywheel housing. If the assembly is remote mounted and shaft driven with a coupling, check for face run out to 0.002 in. on each flange apart. With flanges together a 0.005 in. gap is permitted for angular misalignment. Concentricity, also checked with dial indicators, should be good within 0.005 in. Make adjustments by shimming under one or more of the solid mounts.
- ☐ Use isolaters for instruments, radiators, etc. attached to the top of the subbase to prevent damage caused by the vibrations that are transferred through the solid engine mounts.
- ☐ All mounting components must be strong enough to withstand the dynamic loadings associated with the application.
- ☐ Control the bending moment at the rear of the cylinder block by placement of the rear mount or cradle (refer to section 10.6).

10.3 FLEXIBLE MOUNTING SYSTEMS

Flexible mountings enable the supporting structure to be isolated from engine vibration.

In any flexible mounting arrangement, consider the following requirements;

- ☐ The selected mounts must be rated to support the static and dynamic loads calculated for each mount.
- ☐ The mountings should protect the engine from any stresses caused by flexing and distortion of the machine frame.
- ☐ All mounting components must be strong enough to withstand the dynamic loadings associated with the application.
- ☐ The mountings must isolate the application from engine vibration at all engine speeds.

10.3.1 FLEXIBLE MOUNT SELECTION

The easiest method to obtain the correct resilient mounts is to contact one of the many manufacturers of resilient mounts. They have computer programs that will come up with the right mounts for the application. However you still have to be prepared to furnish them the necessary information as follows:

1. Name and description of the application and usage anticipated. This includes:
   - [a] Stationary or mobile
   - [b] On- or off-highway
   - [c] Engine model

 Copyright © 2001 DETROIT DIESEL CORPORATION

[d] Number of cylinders

[e] Four-cycle (for Series 2000 engines)

[f] RPM of operation including idle speed

[g] Configuration (V for Series 2000 engines)

[h] Firing order

[i] Crankshaft arrangement

[j] HP and torque

2. Total weight of engine plus driven components or their individual weights.
3. Center of gravity, x,y,and z of each component individually or combined.
4. Moments of inertia Ixx, Iyy, Izz about the the CG if known. Otherwise a dimensional drawing of the engine to make an estimate.
5. Mounting pad positions x,y, and z relative to RFB and crankshaft centerline.
6. Desired amount of isolation if known, usually a minum of 90%, and 96-98% for generators in buildings.
7. Any expected shock or impact loads described in g's and direction.
8. Closest point x,y, z and (clearances to machine members.
9. Any external forces, such as belt and chain drives, their direction and position.
10. Any environmental conditions such as temperature highs and lows, chemical or oil exposures, etc.

The procedure for self selection still requires reference to supplier catalogs. Essentially you must

1. Calculate the CG of the complete engine/transmission assembly.
2. Determine the reaction forces at each mount location, including static and dynamic at full torque.
3. Select the style of mounts from the manufacturer's catalog that suit the application and environmental conditions.
4. Select the particular mounts of that style that are within the load range calculated. There might be several that will fulfill the requirements. Also, you might need different mountstiffness between front and rear to maintain a balanced deflection. Further, you might find it convenient to use two or more resilient mounts closely spaced at each mounting position to support the loads.
5. Determine the static and dynamic deflections from their data charts and curves.
6. Calculate the natural frequency, Fn, of the mounts using the dynamic deflection rate and compare the input frequencies, (, to the natural frequency calculated . If (/Fn is greater than (2, it is in the isolation range. If it is less than (2, it is in the amplification range. If it is between 0.6 and (2 then it is in resonance range and should not be used. A new selection will have to be made. If less than 0.6 it is usable but not desirable.

All information subject to change without notice.
7SA2000 0103 Copyright © 2001 DETROIT DIESEL CORPORATION

7. Once these hurtles are over you need to check for the location of the elastic center to determine if the system is adequately decoupled and check for motion at close contact points between the engine and the frame, fan tip, or other nearby devices.

For more details and formulas to use in your calculations, refer to Barry Controls bulletin IOEM1, or Lord Manufacturing bulletin PC2201o. Even after going to all this trouble you should still confirm the suitability of the selected mounts with the manufacturer. DDC assumes no responsibility for the resilient mounting system performance

10.4 INSTALLATION CHECK LIST

To ensure proper installation of the isolators, DDC/MTU has found several common problems to check for upon completion. The most important items are:

1. Based on the engine support calculation, ensure that the load capacity of the isolator is adequate at each location.
2. When applicable, ensure that the space between the mount and structure is enough to prevent "shorting" of the isolator.
3. Ensure that there are no sound-shorts: direct contact of the engine with other components (brackets, pipes, etc.) which are rigidly attached to the frame/applications.
4. For mounting systems other than three -point the load at each mount should be balanced or adjusted to prevent excessive loads at the mountings and high engine vibration levels.

10.5 FRONT ENGINE MOUNT OPTIONS

The available front engine mount options are listed in Table10-1

UPC Group	Part Number or Assembly Number	Description and Notes
6Q-0739	23527984	Support Assembly, Trunnion
	23512385	Isolator
	SK-11145	Drawing, Use with 6J01–0136
6J01–0136	5360150201	Cover, Front Lwr. for Trunnion and OBB
6Q00–0650	5362370041	Brackets (4), Solid Mount Spacers (4)
	5362370057	Use wtih MTU “0” flywheel housing. Use with 6J010143
6J010143	53601050401	Cover, Front Lwr, less Trunnion and OBB

Table 10-1 Front Mount Groups

 Copyright © 2001 DETROIT DIESEL CORPORATION

10.6 ENGINE SUPPORT

See Figure 10-7 to determine the distance of rear mounts to achieve a zero bending moment at the rear of the cylinder block.

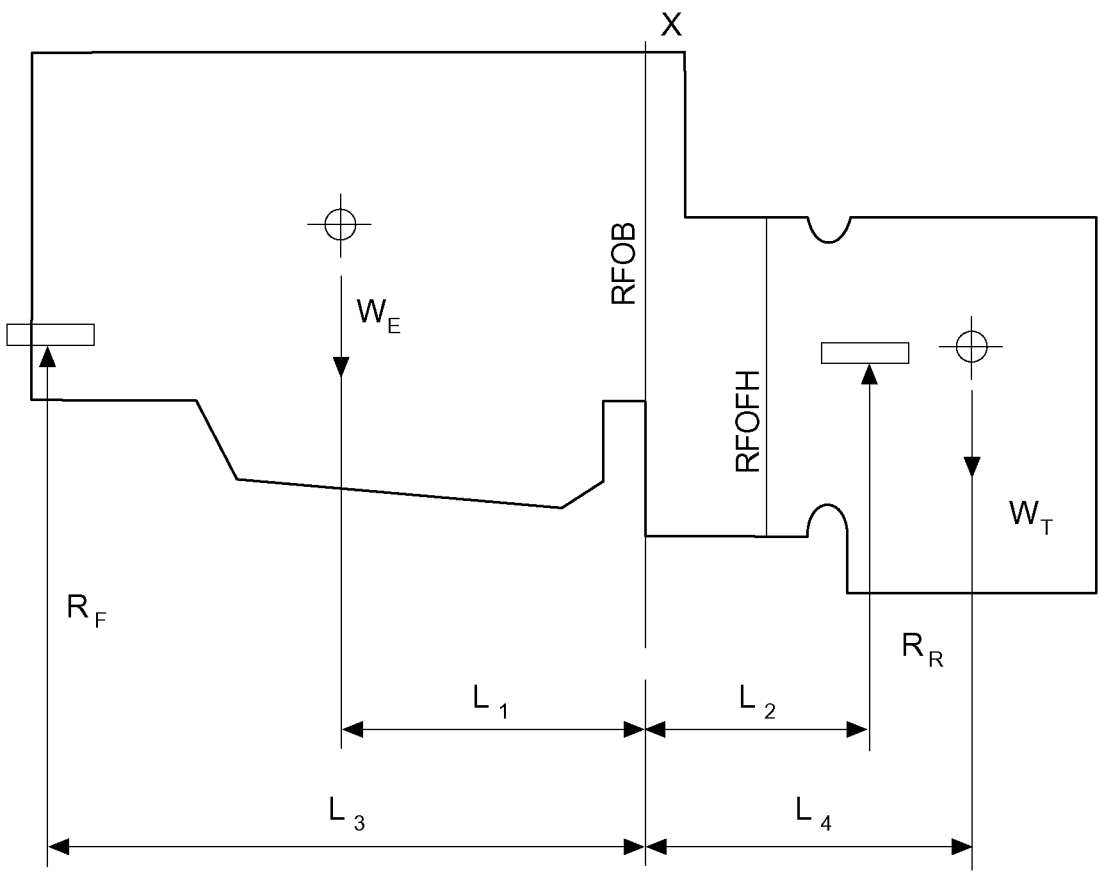

DETERMINATION OF DISTANCE OF REAR MOUNTS (L_2) TO ACHIEVE ZERO BENDING MOMENT AT REAR OF CYLINDER BLOCK.

WEIGHT OF ENGINE (DRY PLUS OIL AND WATER)	W_E	_____
WEIGHT OF TRANSMISSION (DRY PLUS OIL)	W_T	_____
DISTANCE TO ENGINE C.G.	L_1	_____
DISTANCE TO FRONT MOUNT	L_3	_____
DISTANCE TO TRANSMISSION C.G.	L_4	_____
DISTANCE TO CENTERLINE REAR MOUNT	L_2	_____

$$L_2 = \frac{W_T L_4 L_3}{W_E (L_3 - L_1) + W_T L_3} = _____$$

41195

Figure 10-7 Distance of Rear Mounts for Zero Bending Moments

All information subject to change without notice.
7SA2000 0103 Copyright © 2001 DETROIT DIESEL CORPORATION

See Figure 10-8 to determine the bending moment at the rear of the cylinder block when engine mount locations are fixed.

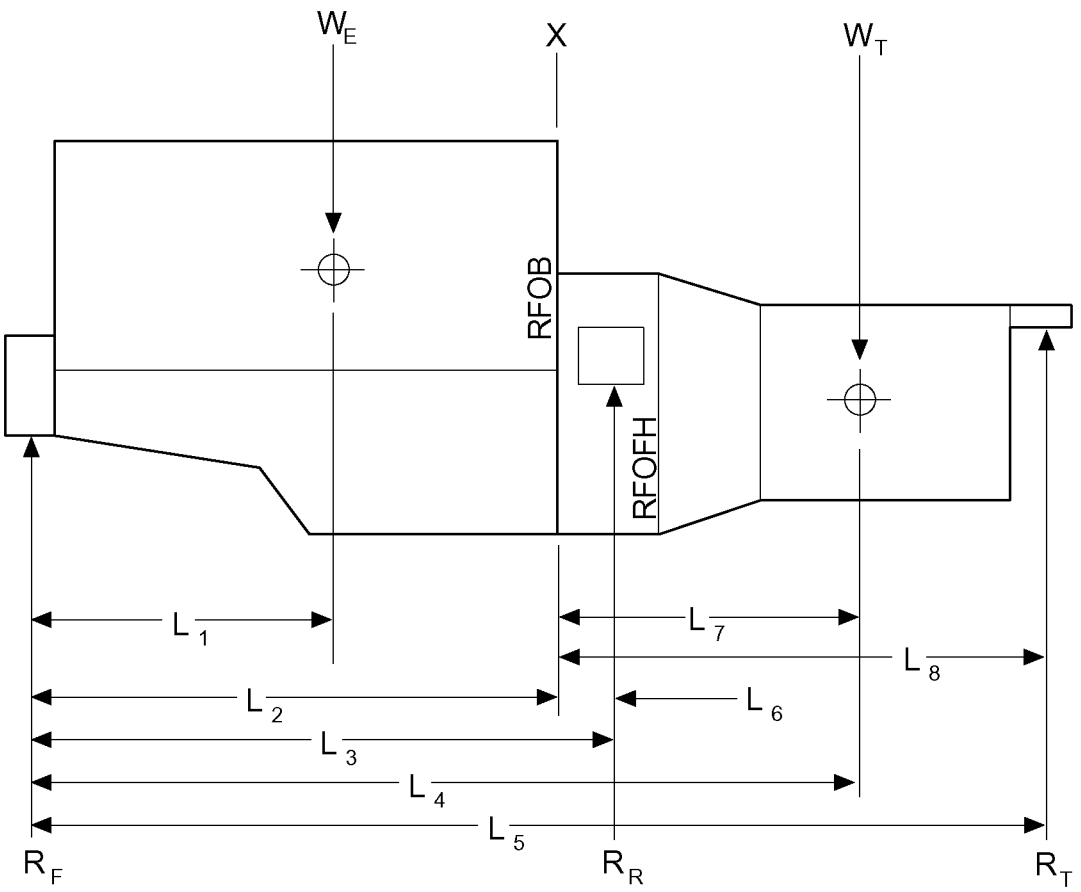

DETERMINATION OF BENDING MOMENT AT REAR OF CYLINDER BLOCK (M_X) WHEN ENGINE MOUNT LOCATIONS ARE FIXED. THE ENGINE MOUNT REACTIONS, R_F AND R_R, MUST FIRST BE DETERMINED. TO DO THIS, THE TAIL SUPPORT REACTION, R_T, MUST BE ASSUMED TO BE ZERO OR A PREDETERMINED VALUE WHICH MAY BE BUILT INTO THE APPLICATION.

$$R_R \quad \frac{W_E L_1 + W_T L_4 - R_T L_5}{L_3} = _____ \text{ LBS.}$$

$$M_X \quad W_T L_7 - R_R L_6 - R_T L_8 = _____ \text{ IN. LBS./12} = _____ \text{ FT. LBS.}$$

1000 FT.LBS = MAXIMUM ALLOWED

41194

Figure 10-8 Bending Moment for Fixed Mounting System

 Copyright © 2001 DETROIT DIESEL CORPORATION

THIS PAGE INTENTIONALLY LEFT BLANK

 Copyright © 2001 DETROIT DIESEL CORPORATION

11 TORSIONAL ANALYSIS

Every Series 2000 engine must have a torsional analysis done. Torsional vibration calculations may be performed using mass elastic data. Separate mass elastic diagrams for each engine size as well as a flywheel inertia table and a damper/pulley table (both listed by part number) will allow for all possible engine/flywheel /damper & pulley combinations.

The forms to request a torsional analysis may be found at the end of this chapter.

11.1 MASS ELASTIC

Series 2000 specific mass elastic data is available. This data can be requested from MTU or DDC for special use. Mass elastic system data is confidential and must be handled with care. To request this information contact:

Detroit Diesel Corporation

Sales Engineering

Phone: (313) 592-5332

An equivalent mass elastic system of an 8, 12, and 16V Series 2000 engine is provided on the following pages. These figures represent typical mass elastics that reflect the standard option flywheel. See Figure 11-1 for the equivalent mass elastic system of an 8V Series 2000 engine. See Figure 11-2 for the equivalent mass elastic system of a 12V engine and see Figure 11-3 for the equivalent mass elastic system of a 16V engine.

 Copyright © 2001 DETROIT DIESEL CORPORATION

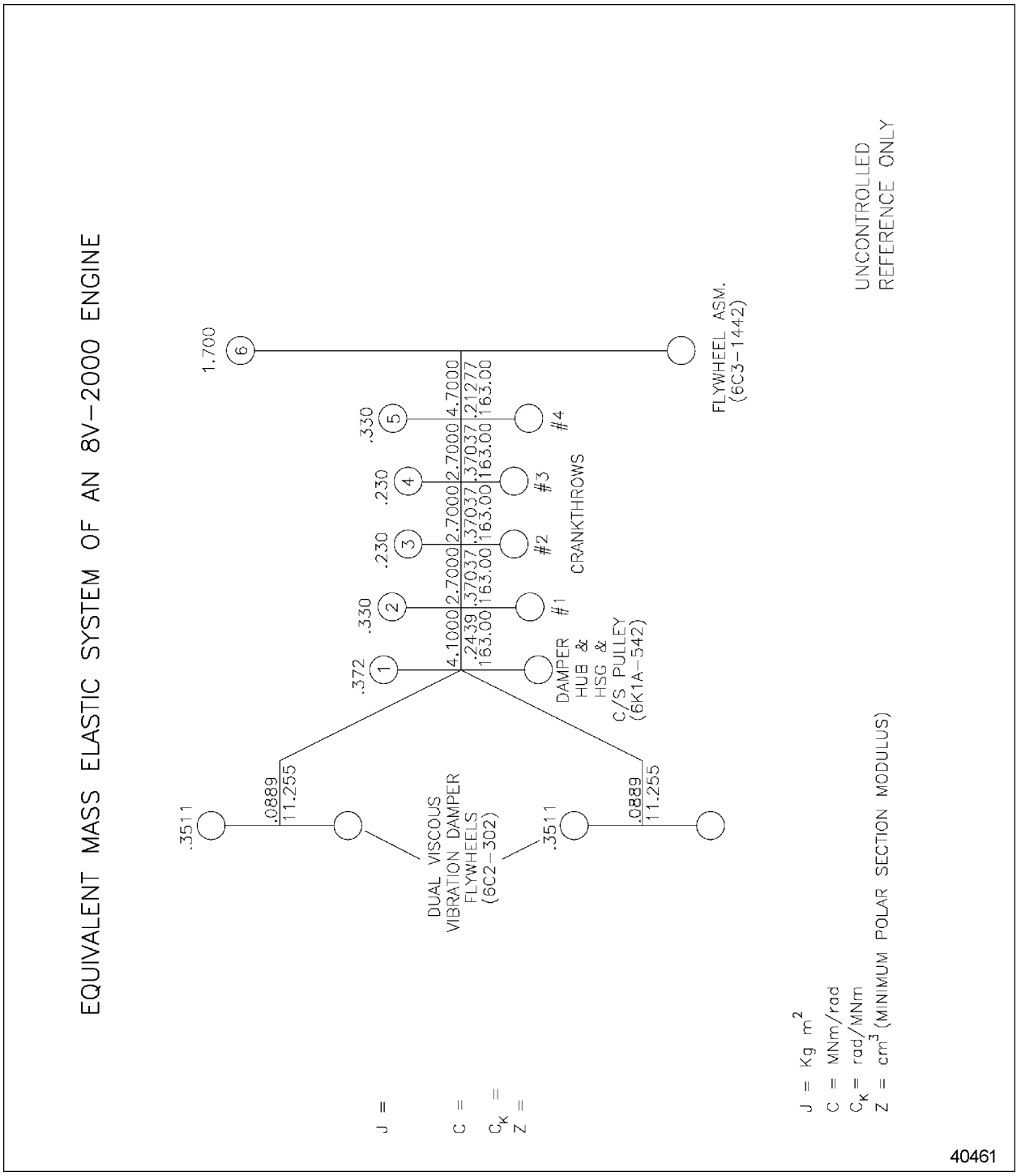

Figure 11-1 Equivalent Mass Elastic System of an 8V-2000 Engine

All information subject to change without notice.
7SA2000 0103 Copyright © 2001 DETROIT DIESEL CORPORATION

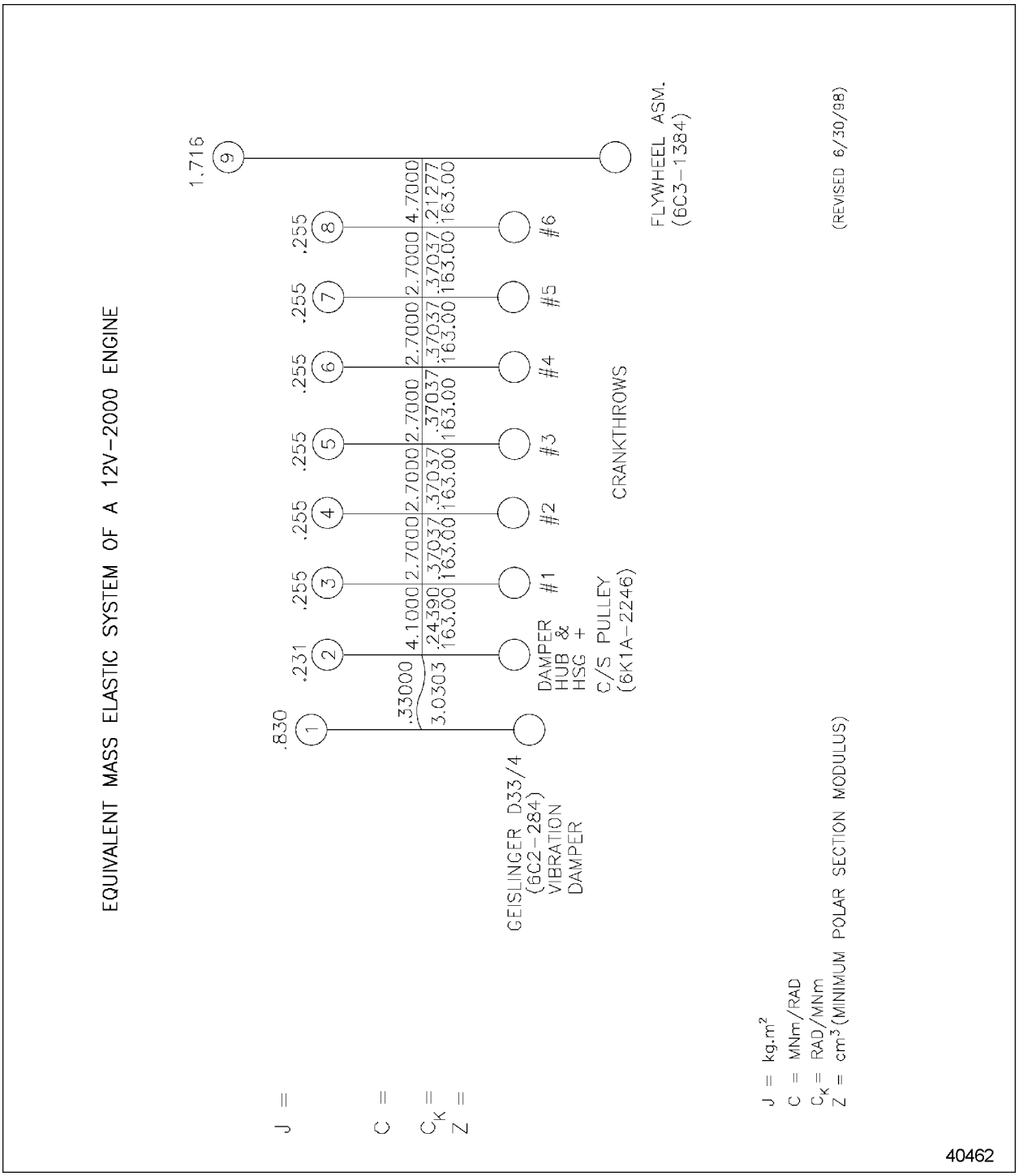

Figure 11-2 Equivalent Mass Elastic System of an 12V-2000 Engine

 Copyright © 2001 DETROIT DIESEL CORPORATION

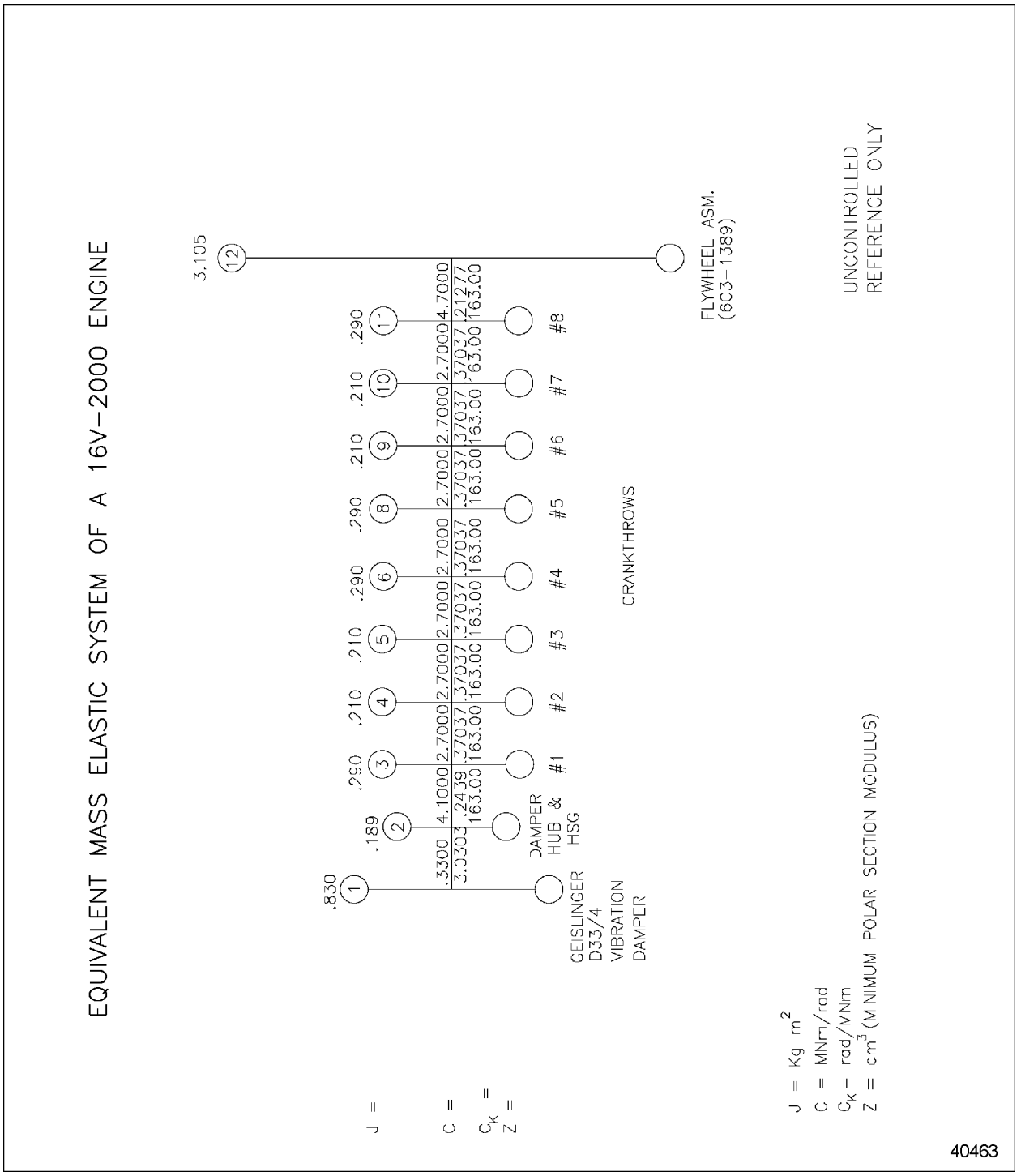

Figure 11-3 Equivalent Mass Elastic System of an 16V-2000 Engine

All information subject to change without notice.
7SA2000 0103 Copyright © 2001 DETROIT DIESEL CORPORATION

DETROIT DIESEL
CORPORATION

TORSIONAL ANALYSIS REQUEST FORM

TO BE COMPLETED BY REQUESTING ORGANIZATION — MUST BE ACCOMPANIED BY 7SA667, 7SA668 OR 7SA669 (WHICHEVER IS APPLICABLE)

DATE _____

WRITTEN BY _____

NAME OF ORGANIZATION _____

CITY _____ STATE _____ ZIP _____

PURCHASE ORDER NO. _____

TYPE OF APPLICATION _____

ENGINE MODEL NO. _____

ENGINE SERIAL NO./DDC SALES ORDER NO. _____

CERTIFICATION BY _____

If certification is other than Lloyds Register of Shipping, American Bureau of Shipping, Det Norske Veritas, or MIL-STD-167-2, please supply a copy of the requirements.

NOTE: Submit completed form to Detroit Diesel Corp.
13400 Outer Drive West, Detroit, MI 48239-4001
Attention: DDC Sales Engineering (A-1)

TO BE COMPLETED BY DDC SALES ENGINEERING DEPARTMENT

TAR NO. _____

DUE DATE _____

AUTHORIZED BY: (Sales Engineering Department) _____

CHARGE $ _____

DETROIT DIESEL CORPORATION
13400 Outer Drive, West / Detroit, Michigan 48239-4001

INDUSTRIAL

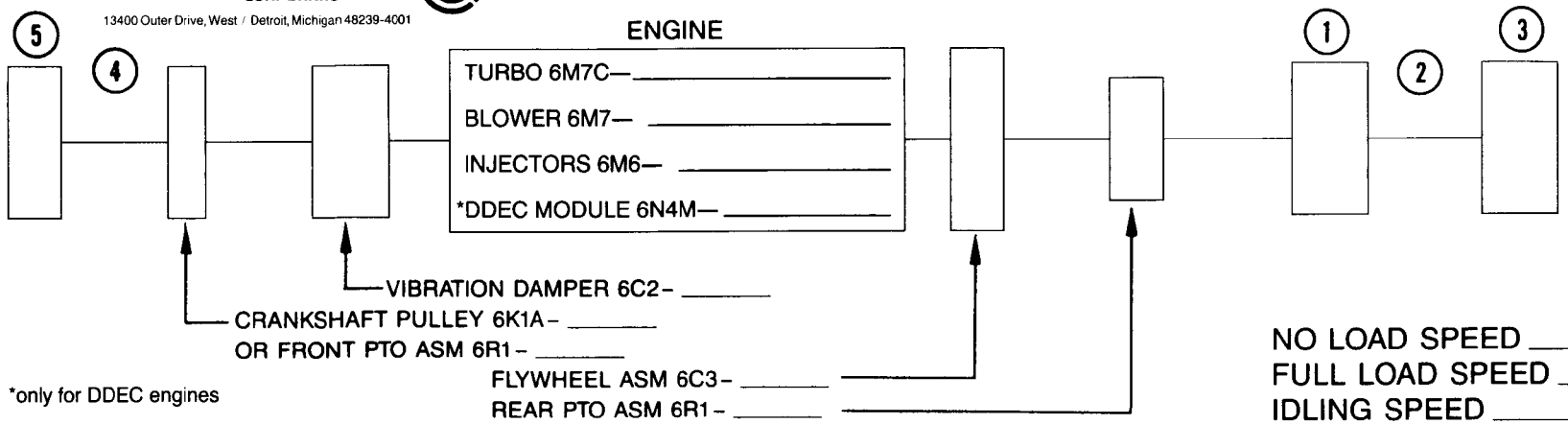

*only for DDEC engines

NO LOAD SPEED _____
FULL LOAD SPEED _____
IDLING SPEED _____

1 COUPLING-

MANUFACTURER _____

SIZE/TYPE

INERTIA GD² ☐ WR² ☐		UNITS
ATTACHED TO FLYWHEEL	_____	_____
ATTACHED TO SHAFT	_____	_____
STIFFNESS		
DYNAMIC ☐	_____	_____
STATIC ☐	_____	_____
SHORE HARDNESS	_____	_____
DYNAMIC MAGNIFIER	_____	_____
RELATIVE DAMPING FACTOR	_____	_____

IF DRIVE GEAR-

MANUFACTURER _____

INERTIA GD² ☐ WR² ☐ _____ _____

ADJUSTED TO INPUT SPEED YES ☐ NO ☐

RATIO _____

STEP UP ☐ REDUCTION ☐

2 SHAFT-

		UNITS
STIFFNESS/FLEXIBILITY	_____	_____
MIN. DIAMETER	_____	_____

3 AIR COMPRESSOR, PUMP, ETC.-

INERTIA GD² ☐ WR² ☐	_____	_____
WEIGHT	_____	_____

4 SHAFT-

STIFFNESS/FLEXIBILITY	_____	_____
MIN. DIAMETER	_____	_____

5 AIR COMPRESSOR, PUMP, ETC.-

INERTIA GD² ☐ WR² ☐ _____ _____

ADJUSTED TO INPUT SPEED YES ☐ NO ☐

RATIO _____

STEP UP ☐ REDUCTION ☐

NOTE: SUPPLY A TORQUE EFFORT CURVE IF A RECIPROCATING COMPRESSOR OR PUMP IS USED.

12 EFFECTS OF ENVIRONMENTAL CONDITIONS

Power developed by any internal combustion engine depends on the amount of fuel burned with the available oxygen in the cylinder. The amount of oxygen in a cubic foot of air is reduced if water vapor is present, or if the air is expanded due to increased temperature or reduced pressure.

This section includes deratings for:

- ☐ Air Inlet Temperature
- ☐ Exhaust
- ☐ Altitude

Series 2000 engine power is not affected by air inlet restriction, fuel inlet restrictions, fuel temperature, and barometric pressure within the range of normal operational conditions.

12.1 AIR INLET TEMPERATURE

High inlet air temperature to the engine can cause loss of power and heat problems with the cooling system, the lubricating oil and hydraulic oil systems. This may be either due to high ambient temperatures, or because the engine is being used inside a building or structure of a machine which needs more air flow. Figure 12-1 depicts the effects of air inlet temperature.

 Copyright © 2001 DETROIT DIESEL CORPORATION

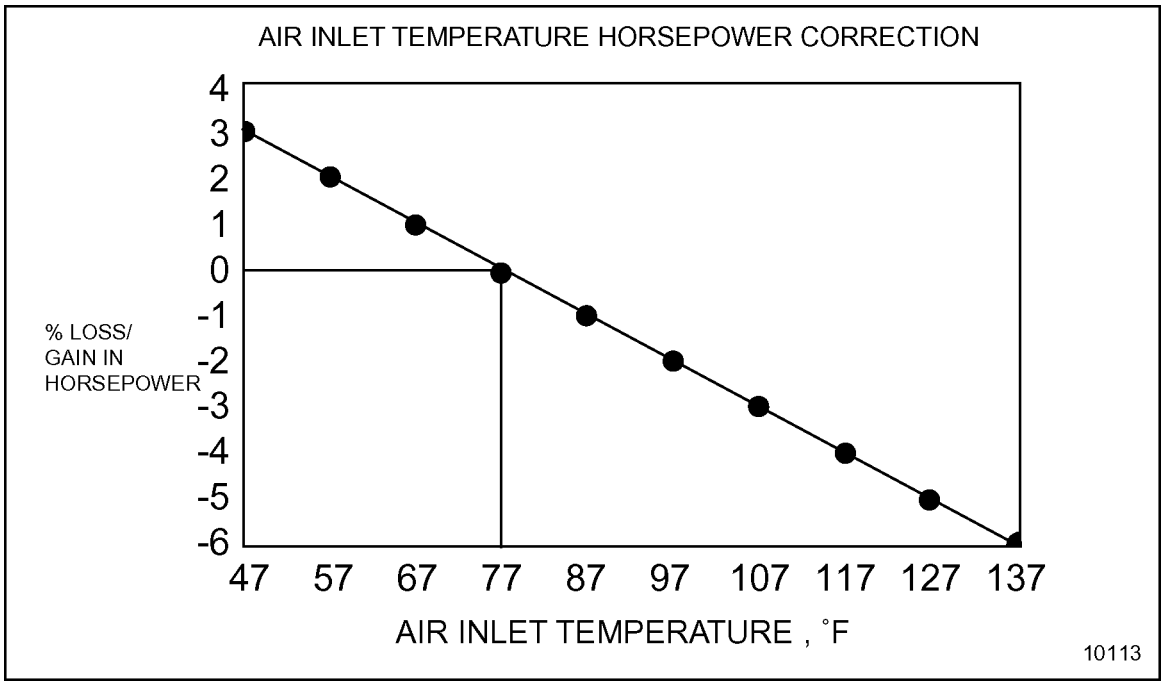

Figure 12-1 The Effects of Air Inlet Temperature

12.2 EXHAUST BACK PRESSURE

Figure 12-2 depicts the effects of exhaust back pressure on engine power.

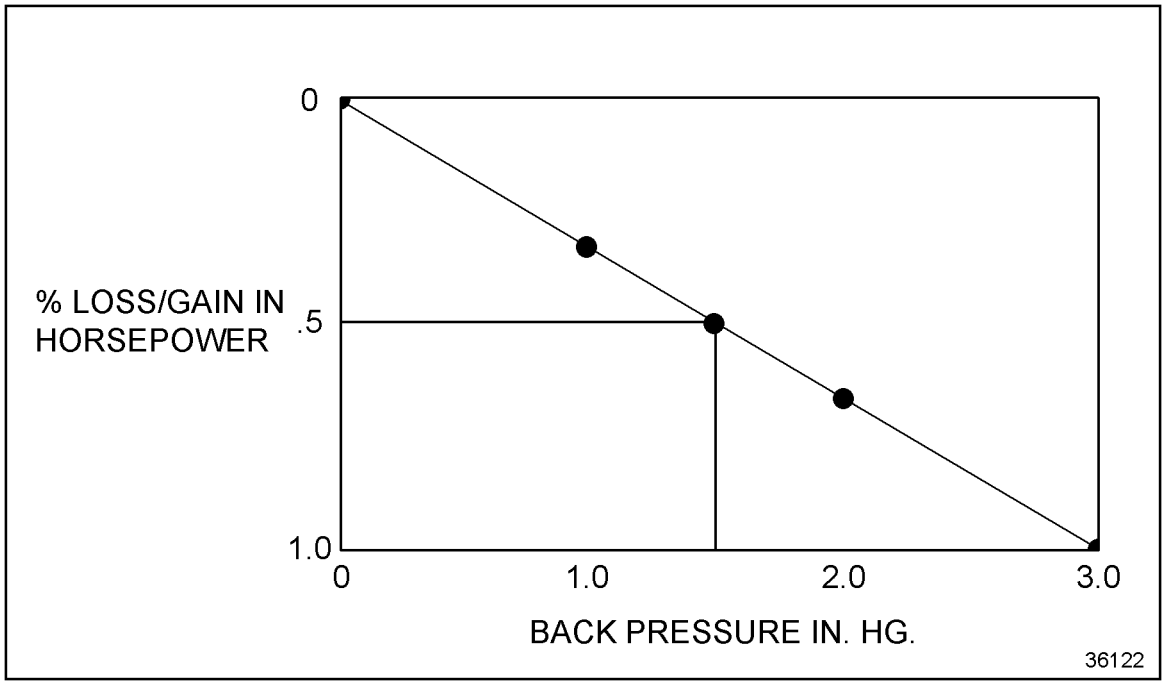

Figure 12-2 The Effects of Exhaust Back Pressure on Engine Power

All information subject to change without notice.
7SA2000 0103 Copyright © 2001 DETROIT DIESEL CORPORATION

12.3 ALTITUDE

The loss of power is not normally important at altitudes of less than 150 m (500 ft) above sea level. The degree of power loss at higher altitudes is determined by the altitude and the fuel injection specification needed.

The Altitude Performance Curve on page 12-3 depicts the effects of altitude on engine power.

 Copyright © 2001 DETROIT DIESEL CORPORATION

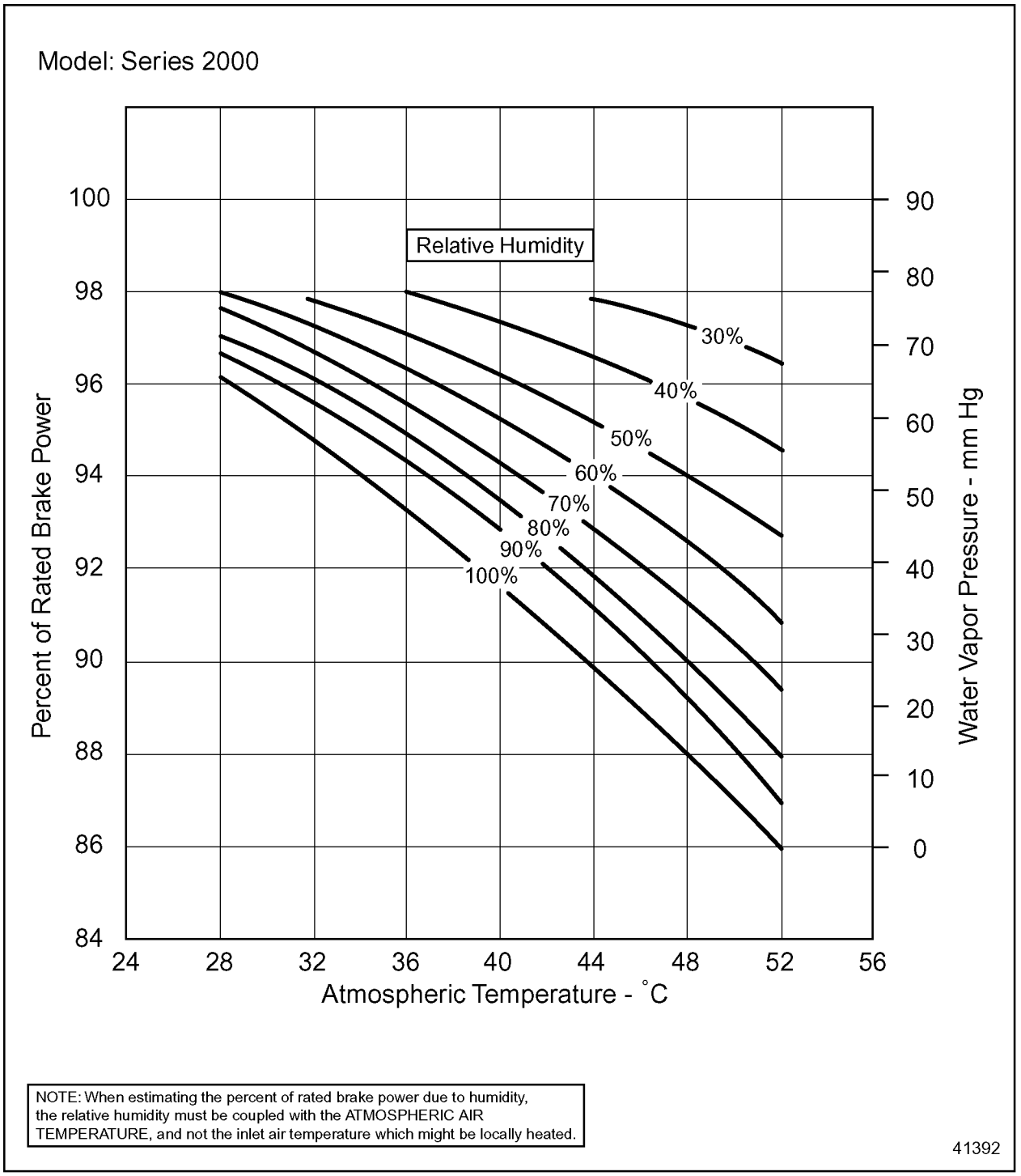

Figure 12-3 The Effects Of Altitude On Engine Power

All information subject to change without notice.
7SA2000 0103 Copyright © 2001 DETROIT DIESEL CORPORATION

13 ELECTRONIC CONTROLS

The Detroit Diesel Electronic Control (DDEC®) system is an advanced technological electronic fuel injection and control system. See Figure 13-1. The DDEC system offers significant operating advantages over traditional mechanically governed engines. The systems optimize control of critical engine functions which affect fuel economy and emissions. The DDEC III and DDEC IV systems provide the capability to protect the engine from serious damage resulting from conditions such as high engine temperatures or low oil pressure.

The major subsystems of DDEC include:

- ☐ Electronic control module (ECM)
- ☐ Electronic unit pump (EUP)
- ☐ System sensors

The ECM receives electronic inputs from sensors on the engine and vehicle, and uses the information to control engine operation. The ECM computes fuel timing and fuel quantity based upon predetermined calibration tables in its memory. The ECM precisely times and meters fuel to each EUP.

Portable equipment facilitates access to DDEC's diagnostic capabilities. The Diagnostic Data Reader (DDR) requests and receives engine data and diagnostic codes. This equipment provides many unique capabilities including cylinder cutout, parameter vs. engine speed (or time), printer output, and data snapshot. The DDR also provides limited programming capability.

The Detroit Diesel Diagnostic Link™ (DDDL), a sophisticated software package supporting the set up, maintenance and repair of engines using DDEC also facilitates access to DDEC's diagnostic capabilities. Used as a diagnostic tool DDDL can be used to change the engine rating, view an audit trail of ECM and injector calibration change, monitor fault codes as they occur, snap shot recording, and set the ECM output functions to particular values to support troubleshooting.

DDEC provides three industry standard serial data links: SAE Standards J1587, J1922, and J1939. SAE Standard J1587 provides two-way communications for the diagnostic equipment and vehicle displays. SAE Standards J1922 and J1939 provide control data to other vehicle systems such as transmissions and traction control devices.

 Copyright © 2001 DETROIT DIESEL CORPORATION

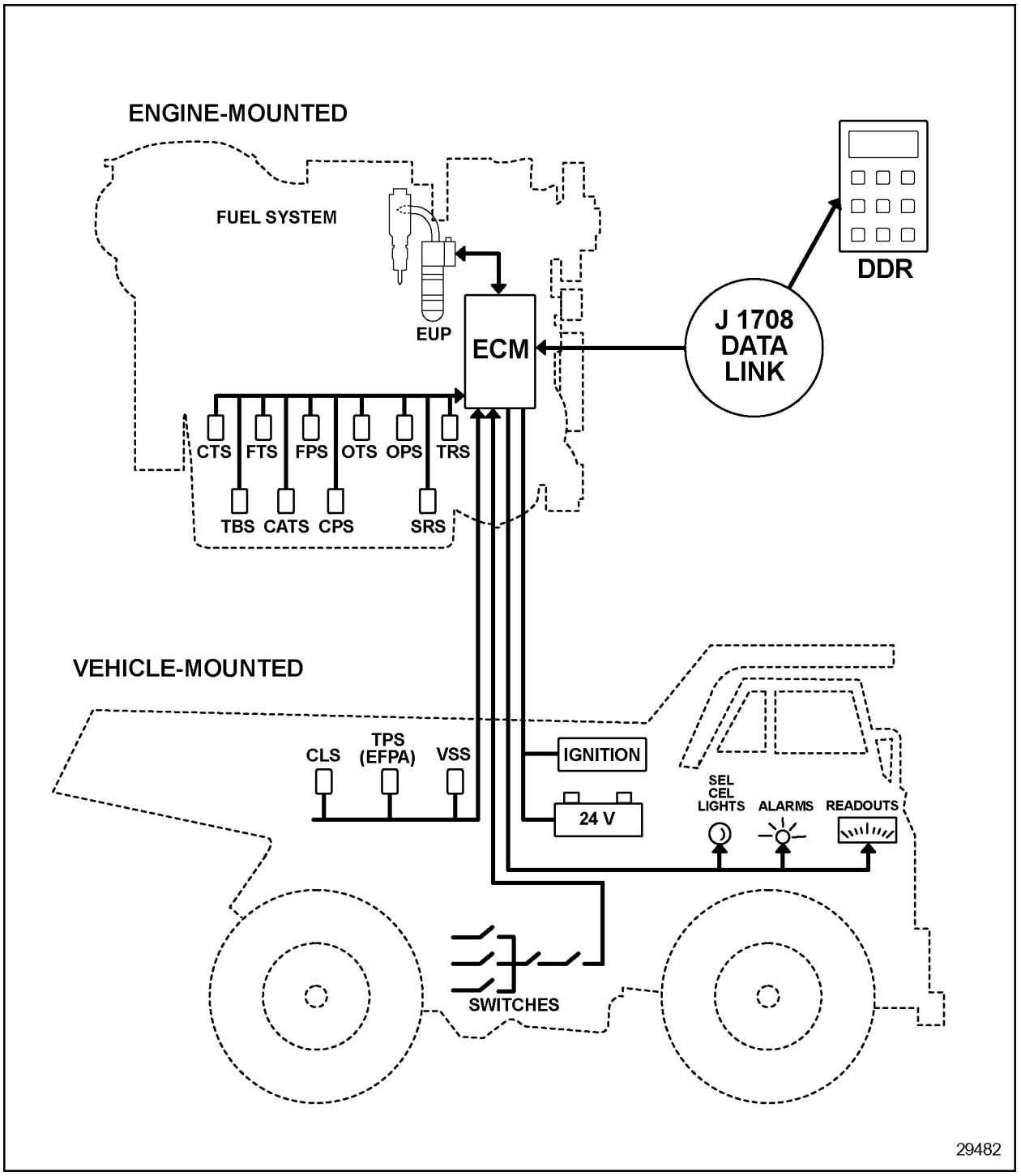

Figure 13-1 Schematic Diagram of DDEC

All information subject to change without notice.
7SA2000 0103 Copyright © 2001 DETROIT DIESEL CORPORATION

13.1 ORIGINAL EQUIPMENT MANUFACTURER REQUIREMENTS

Original Equipment Manufacturer (OEM) supplied hardware is required to install DDEC. The following is the minimum hardware required:

- ☐ Vehicle interface harness assembly (VIH) - This harness connects the vehicle functions to the ECM
- ☐ Power harness assembly - This harness connects battery power (12 or 24 volts) and ground to the ECM and includes fuse(s) or circuit breaker(s)
- ☐ Ignition switch - Switched 12 or 24 volt ignition sense.
- ☐ Check engine light (CEL) - A panel mounted yellow indicator light
- ☐ Stop engine light (SEL) - A panel mounted red indicator light
- ☐ Throttle input device - An electronic foot pedal assembly (EFPA), hand throttle, or alternative throttle device
- ☐ Coolant level sensor (CLS) - A radiator top tank or remote surge tank mounted sensor
- ☐ J1587 - Cab mounted Deutsch diagnostic connector

 Copyright © 2001 DETROIT DIESEL CORPORATION

13.2 ELECTRONIC CONTROL MODULE

The engine mounted ECM (see Figure 13-2) includes control logic to provide overall engine management.

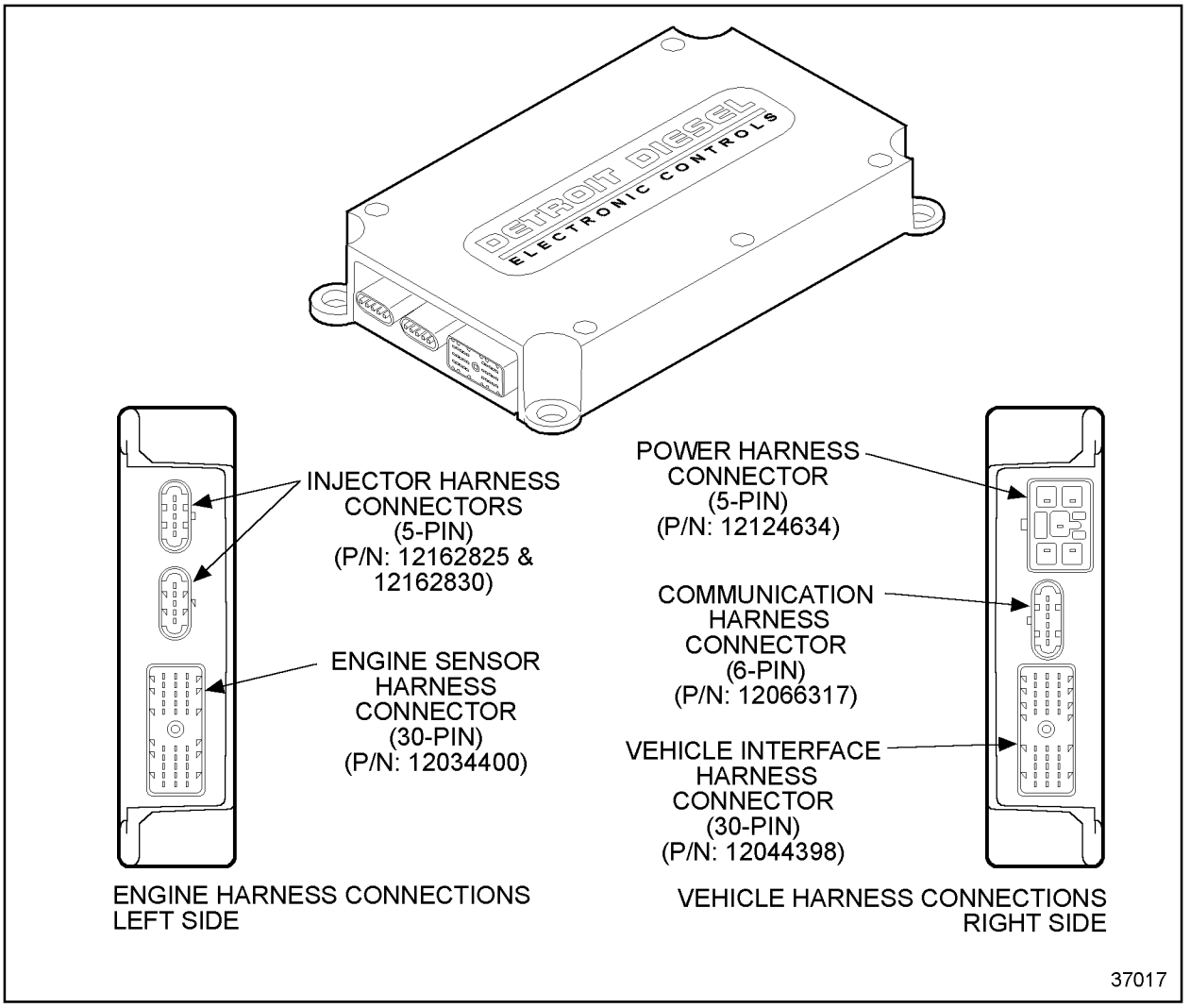

Figure 13-2 The Electronic Control Module

The ECM continuously performs self diagnostic checks and monitors the other system components. System diagnostic checks are made at ignition-on and continue throughout all engine operating modes. The nameplate on the ECM shows the manufacturer's specifications and is important to assist operator or maintenance personnel.

The ECM contains an electronically erasable programmable read only memory (EEPROM). The EEPROM controls the basic engine functions, such as rated speed and power, timing of fuel injection, engine governing, torque shaping, cold start logic, transient fuel delivery, diagnostics, and engine protection. The control logic determines duration and timing of fueling, which results in precise fuel delivery and improved fuel economy.

All information subject to change without notice.
7SA2000 0103 Copyright © 2001 DETROIT DIESEL CORPORATION

13.2.1 MULTI-ECMS

Engines with more than eight cylinders operate with multiple ECMs. One ECM is called the master, while the others are referred to as receivers. The master ECM is the primary controller of the engine. It receives input from the various sensors, determines proper timing and communicates this information to the injectors that the master ECM controls. The master ECM sends this information to the receiver ECM. The receiver ECM instructs its injectors to operate in the same manner. Capability exists to enable independent operation of each portion of the engine in the unlikely event that the communications fail between the master and receiver ECMs.

13.3 ELECTRONIC UNIT PUMP

The EUP provides fuel to the fuel injector nozzle. The nozzle directs pressurized fuel directly into the compression chamber. The EUP uses a solenoid operated valve to control injection timing and metering. The source for high pressure fuel delivery is the cam/rocker arm system. Fuel injection begins when the solenoid valve is closed. Opening the solenoid valve ends injection. The duration of valve closure determines the quantity of fuel injected See Figure 13-3.

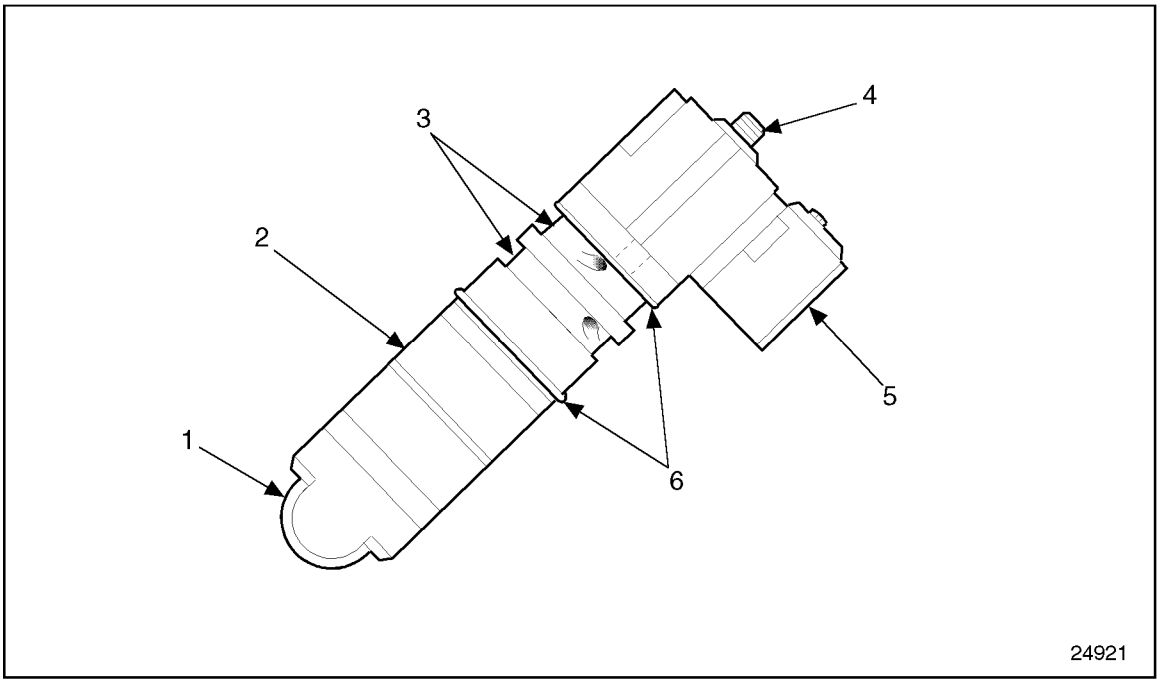

1. Camshaft roller
2. Unit Pump Assembly
3. Fuel Gallery Channels
4. Fuel Outlet Port
5. Unit Pump Solenoid
6. Seal Rings

Figure 13-3 Electronic Unit Pump Assembly

 Copyright © 2001 DETROIT DIESEL CORPORATION

13.4 SYSTEM SENSORS

DDEC system sensors provide information to the ECM regarding various engine and vehicle performance characteristics. The information is used to regulate engine and vehicle performance, provide diagnostic information, and activate the engine protection system.

The Series 2000 Synchronous Reference Sensor (SRS) and Timing Reference Sensor (TRS) (see Figure 13-4are mounted in the flywheel housing.

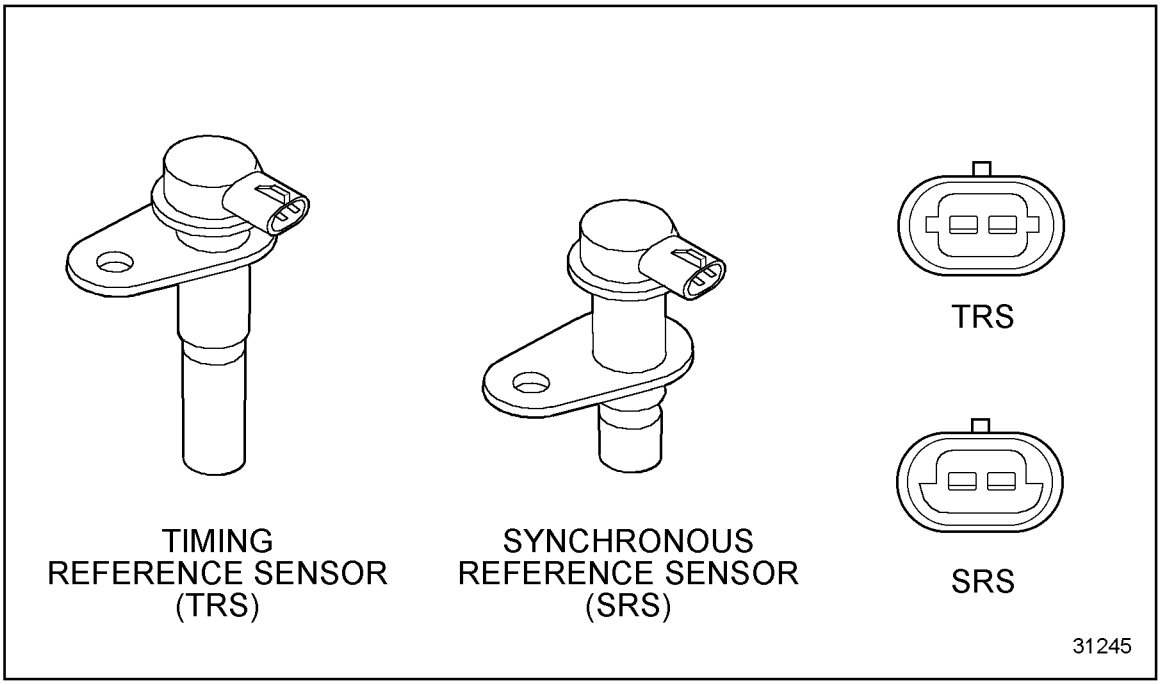

Figure 13-4 The SRS and TRS

All information subject to change without notice.
7SA2000 0103 Copyright © 2001 DETROIT DIESEL CORPORATION

The Fuel Pressure Sensor (FPS) for the Series 2000 engine has a green dot (see Figure 13-5).

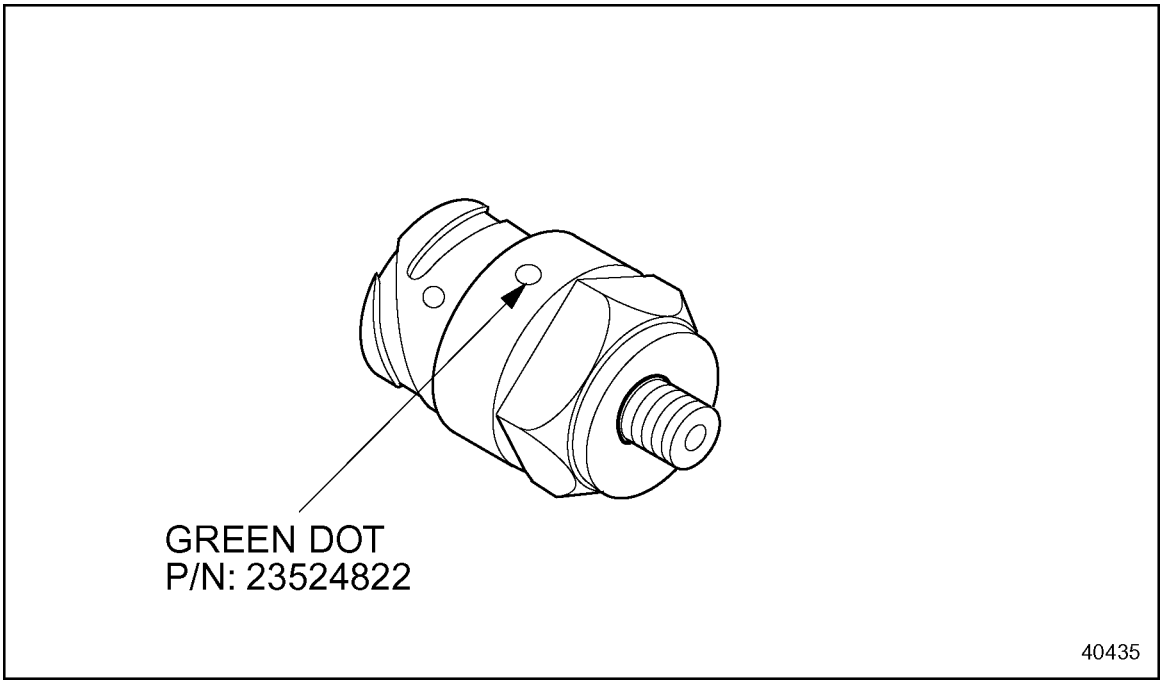

Figure 13-5 Fuel Pressure Sensor - Series 2000

The OPS has a white dot (see Figure 13-6).

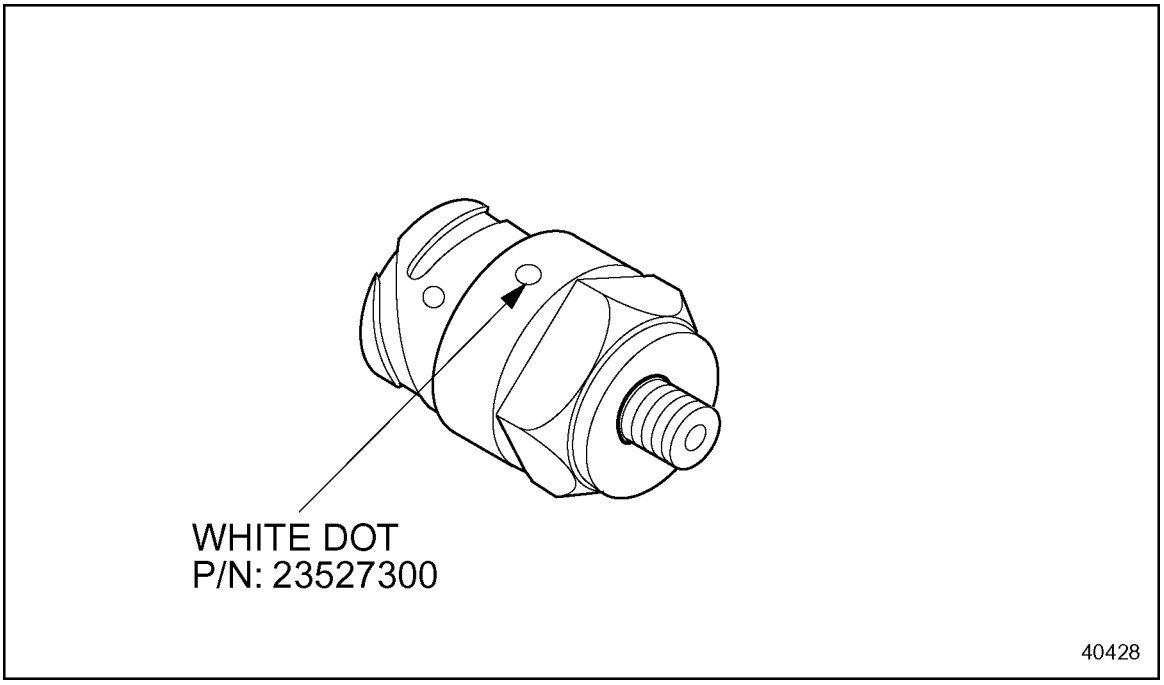

Figure 13-6 Oil Pressure Sensor

 Copyright © 2001 DETROIT DIESEL CORPORATION

A typical temperature sensor used in the Series 2000 may be seen in the following illustration (see Figure 13-7).

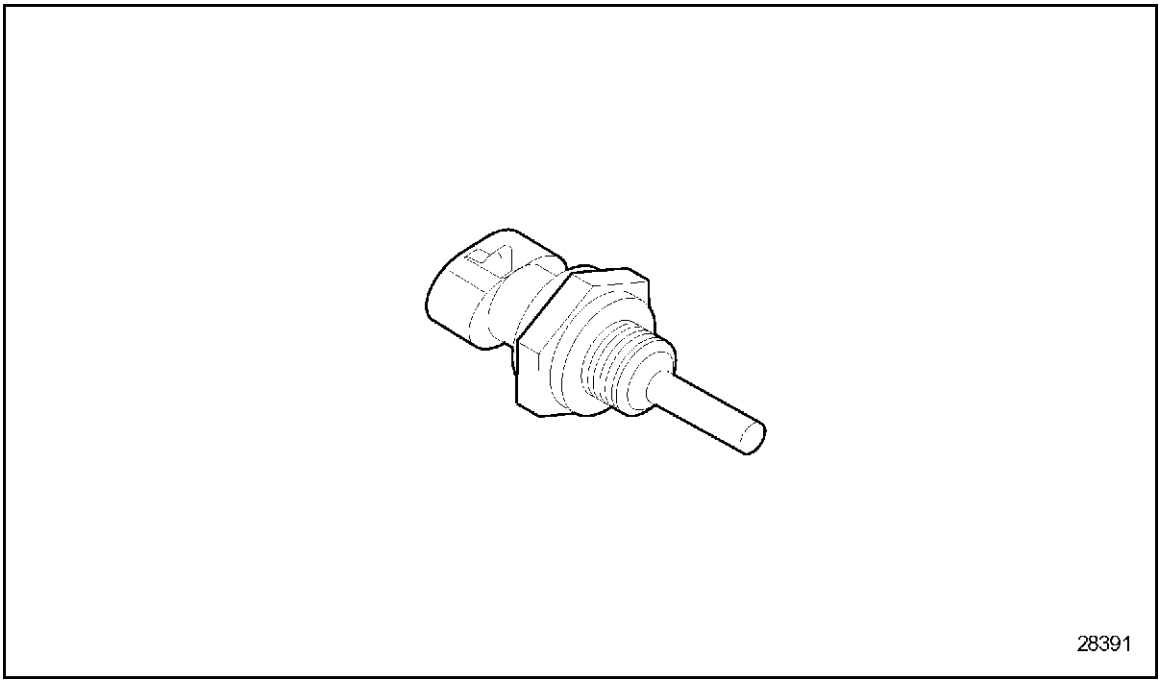

Figure 13-7 Typical Temperature Sensor

See Figure 13-8 for the Turbo Boost Sensor used in the Series 2000.

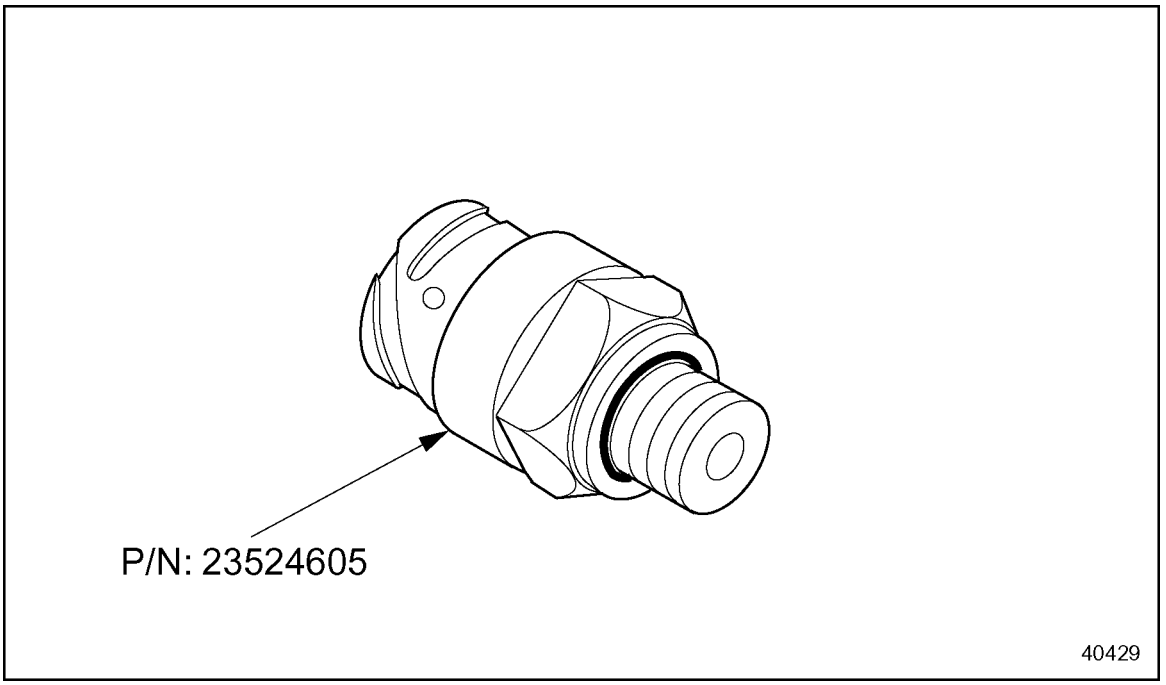

Figure 13-8 Turbo Boost Sensor

All information subject to change without notice.
7SA2000 0103 Copyright © 2001 DETROIT DIESEL CORPORATION

13.5 VEHICLE INTERFACE HARNESS

The VIH (see Figure 13-9) provided by the OEM is also available as an engine option.

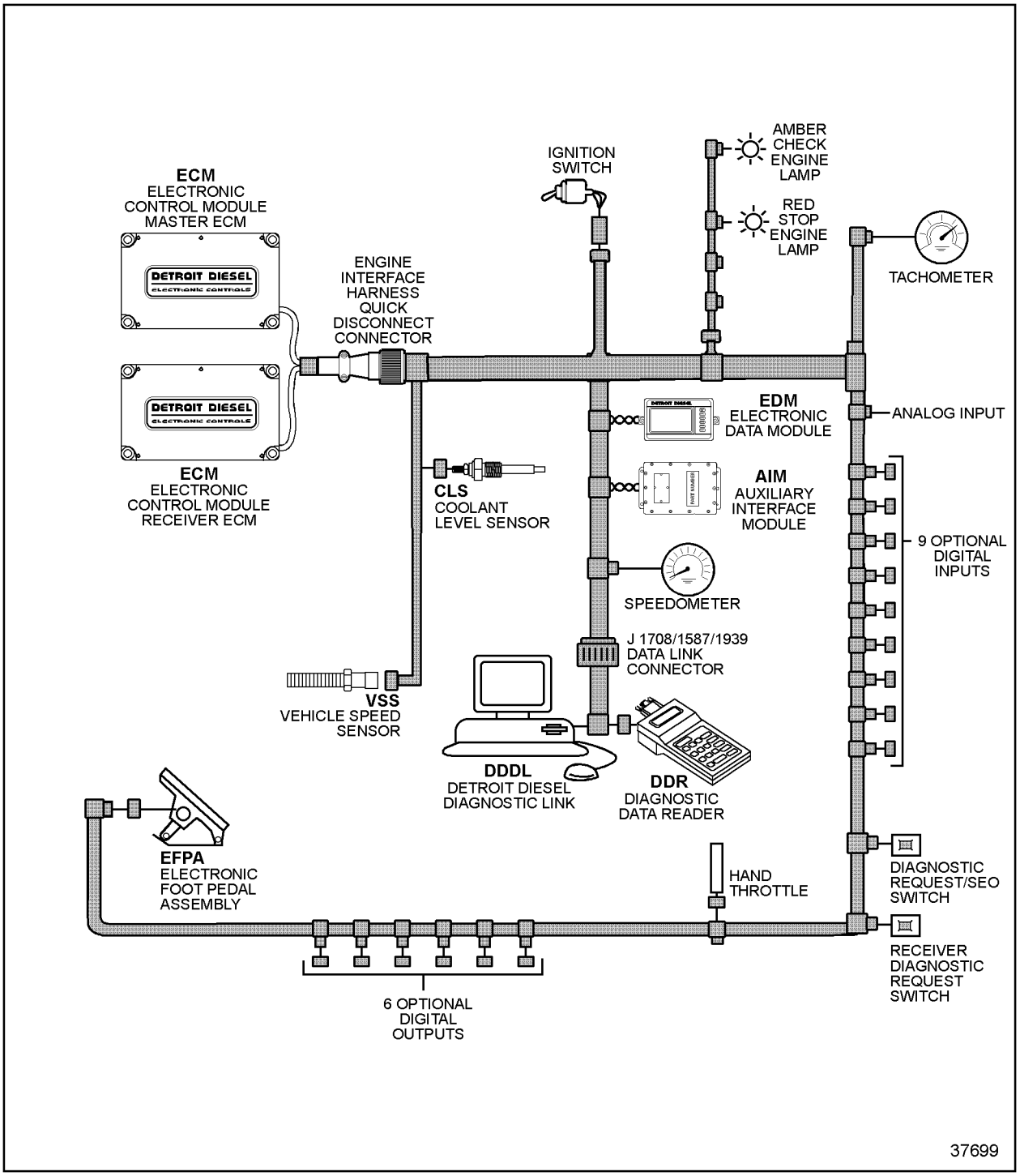

Figure 13-9 Typical Multi ECM Construction and Industrial Vehicle Interface Harness Schematic - Series 2000

 Copyright © 2001 DETROIT DIESEL CORPORATION

The VIH plays several critical roles:

- Transmits ECM output signals to the appropriate devices
- Facilitates the communication of other systems with the engine ECM

The VIH must contain the wires, fuses, relays, switches, connectors, and communication link necessary to perform the aforementioned roles. The VIH must be completely detachable from the engine and all devices it connects to with locking weather-proof connectors.

The VIH is similar to the VIH used for single-ECM engines with the following exceptions:

- The Stop Engine Override/Diagnostic Request Switch is used to flash codes on the CEL and SEL from the master ECM when the engine is not running or the engine is at idle.
- All receiver ECMs have a separate Diagnostic Request Switch that cannot enable the Stop Engine Override function.

Refer to the *DDEC IV Application and Installation* manual (7SA742) for further information and schematic diagrams.

All information subject to change without notice.
7SA2000 0103 Copyright © 2001 DETROIT DIESEL CORPORATION

13.6 POWER HARNESS

The Power Harness provided by the OEM, is also available as an engine option. The Power Harness provides power to the ECM and protects the ECM against voltage damage.

13.6.1 ENGINE POWER HARNESS - MULTI-ECMS

The Engine Power Harness (see Figure 13-10) for multi-ECM applications is usually installed at the factory and delivered connected to all ECMs. The Engine Power Harness terminates with a quick disconnect connector where the OEM Vehicle Power Harness connection is made.

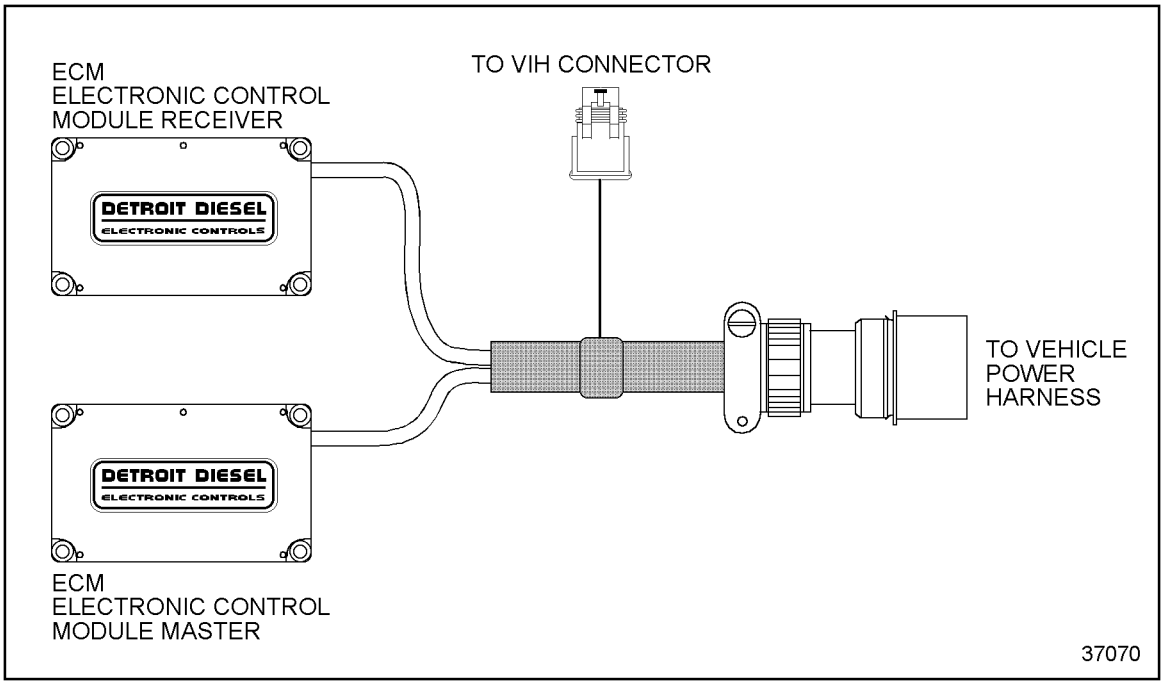

Figure 13-10 The Multi-ECM Engine Power Harness

 Copyright © 2001 DETROIT DIESEL CORPORATION

13.7 ENGINE HARNESS

This harness facilitates the communication of engine sensor input to the ECM. The Engine Sensor Harness (see Figure 13-11) does this by facilitating the receipt of inputs and outputs signals, controlling the fuel injection process and engine speed.

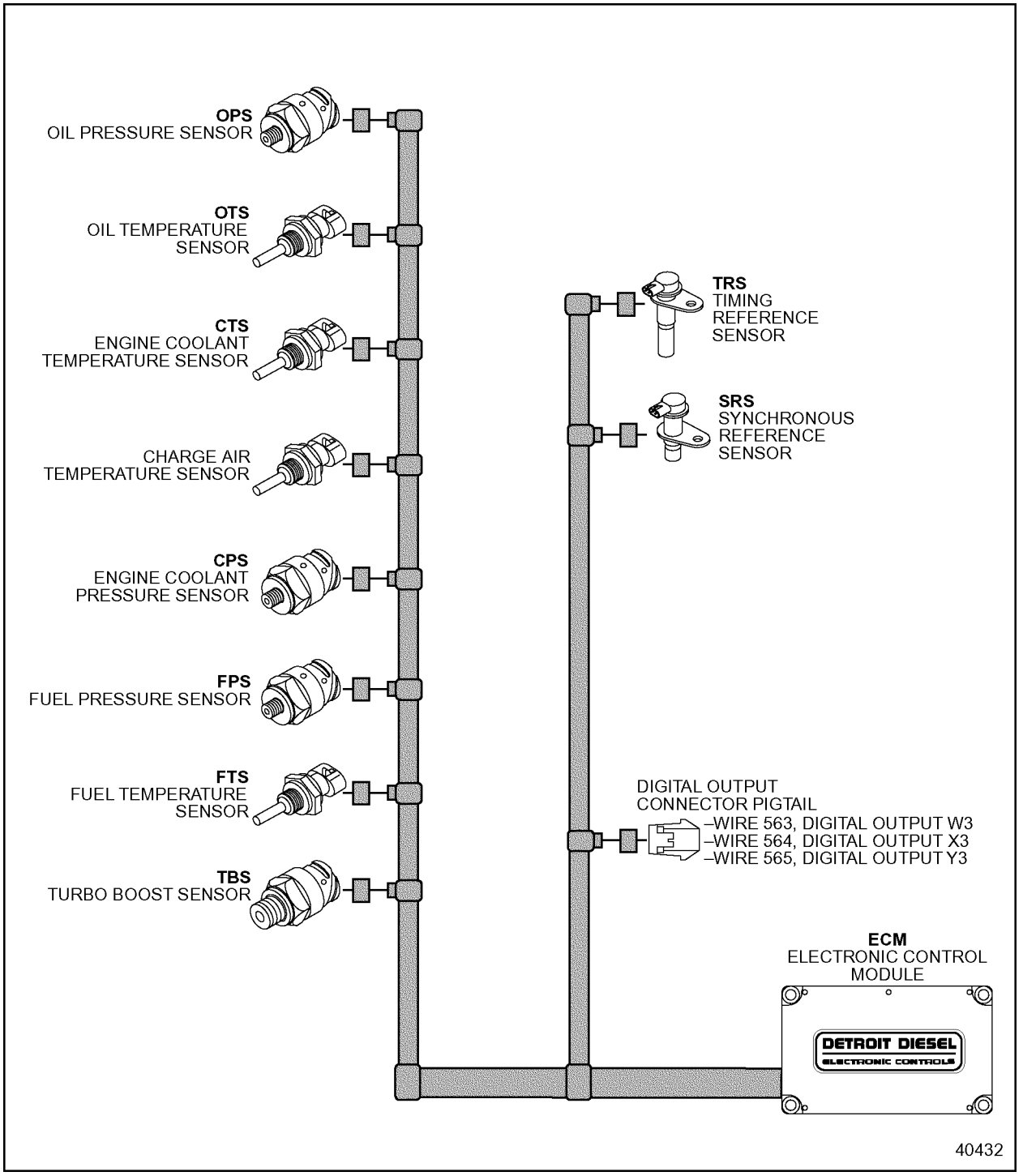

Figure 13-11 A Typical Series 2000 Single-ECM Construction and Industrial Engine Sensor Harness

All information subject to change without notice.
7SA2000 0103 Copyright © 2001 DETROIT DIESEL CORPORATION

See Figure 13-12 for an illustration of a Series 2000 generator set ESH.

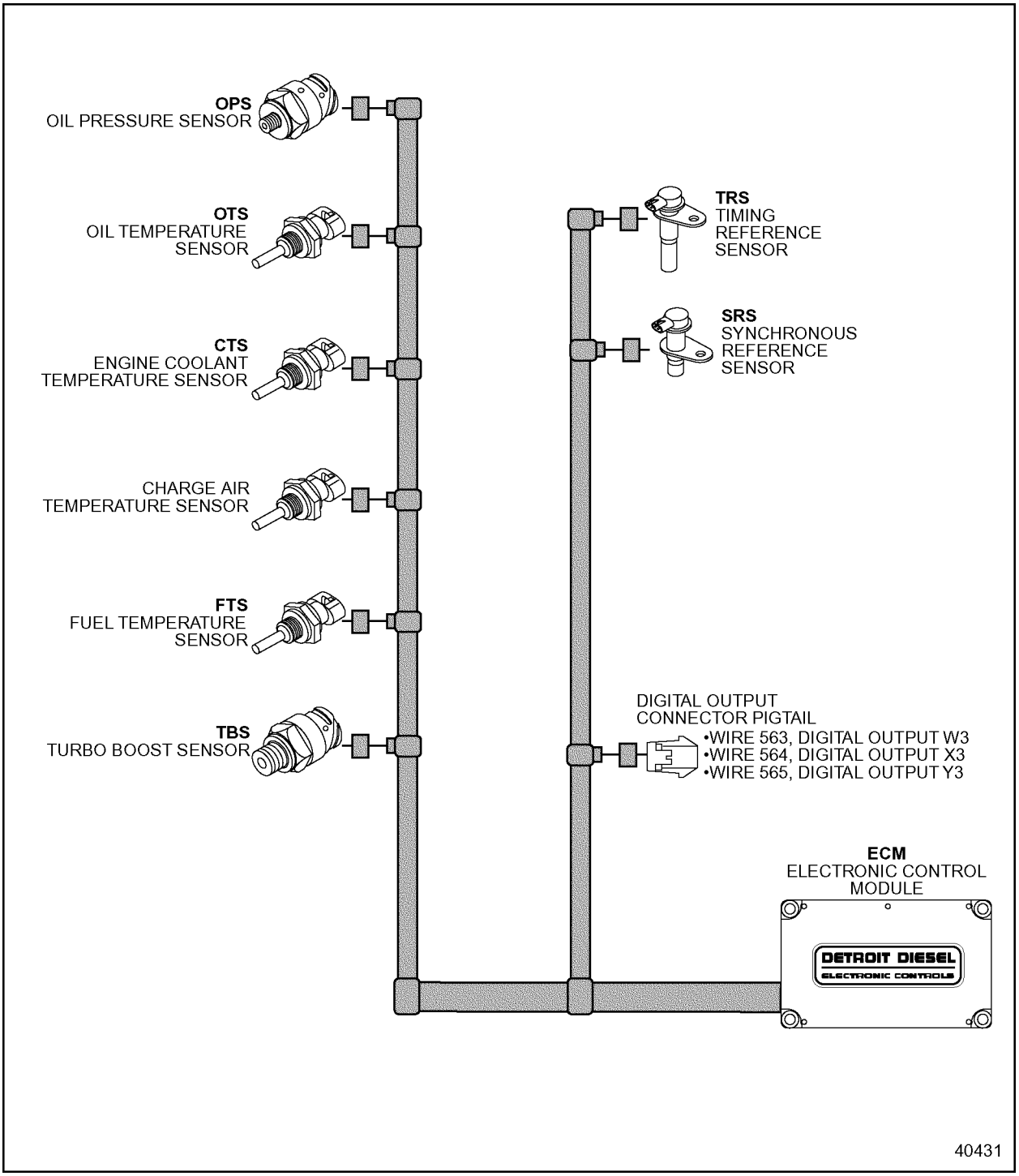

Figure 13-12 Series 2000 Single ECM Genset Engine Sensor Harness

See Figure 13-13 for the location of the Engine Harness and the factory-installed sensors on a single ECM engine.

 Copyright © 2001 DETROIT DIESEL CORPORATION

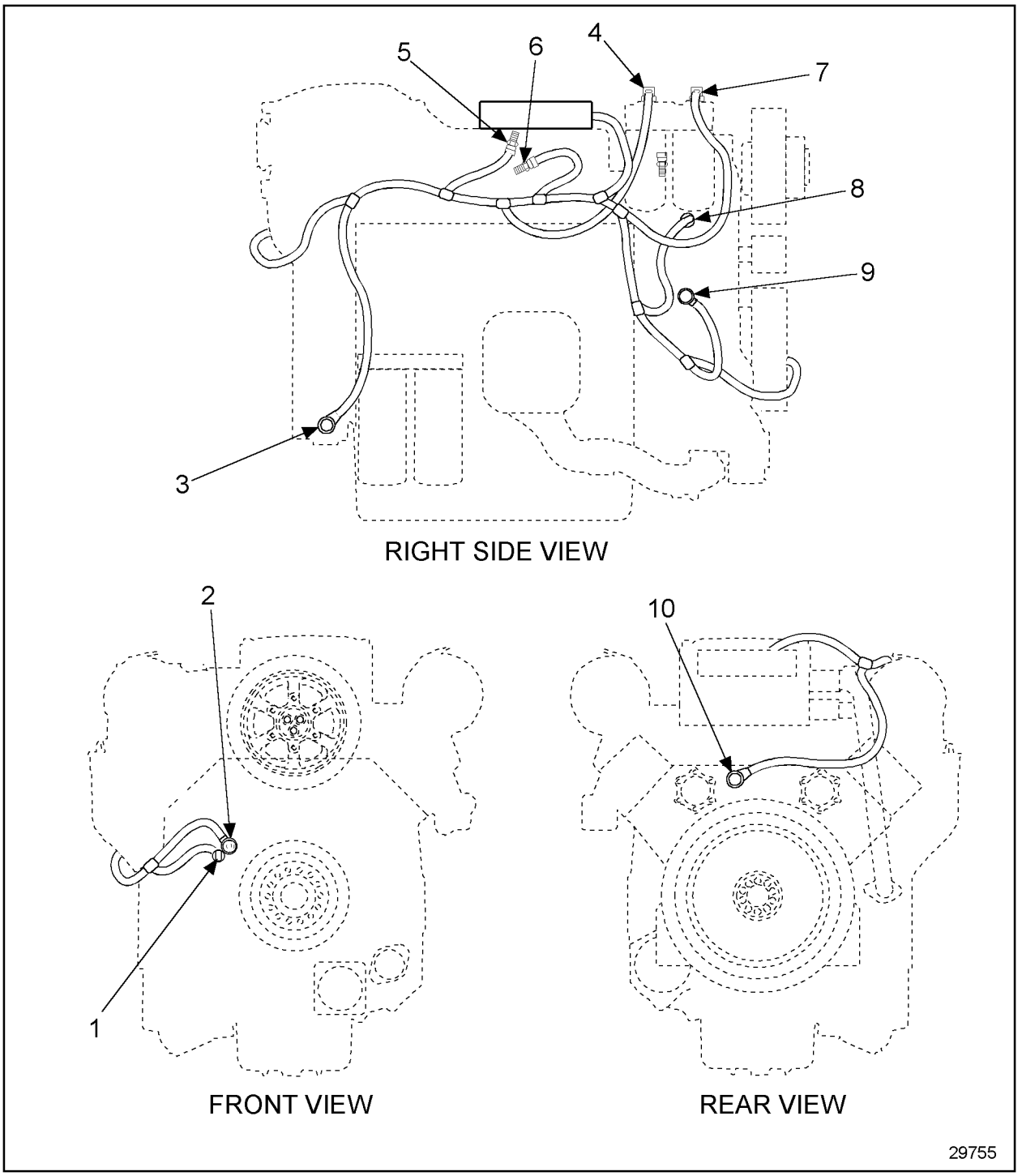

1. Oil Temperature Sensor
2. Oil Pressure Sensor
3. Timing Reference Sensor
4. Fuel Temperature Sensor
5. Charge Air Temperature Sensor
6. Turbo Boost Sensor
7. Fuel Pressure Sensor
8. Coolant Temperature Sensor
9. Coolant Pressure Sensor
10. Synchronous Reference Sensor

Figure 13-13 Typical Location for Factory-installed Sensors

All information subject to change without notice.
7SA2000 0103 Copyright © 2001 DETROIT DIESEL CORPORATION

13.7.1 ENGINE SENSOR HARNESS FOR MULTI-ECM ENGINES

Multi-ECM engines operate with more than one Electronic Control Module. The controlling ECM is referred to as the master ECM, while one receiver is referred to as the first receiver and the other, if required, is the second receiver.

The Engine Sensor Harness (see Figure 13-14) is installed at the factory and is delivered connected to all sensors and all ECMs. This harness contains the following:

- ☐ SAE J1939 communication link between the ECMs
- ☐ A Turbo Boost Sensor for each ECM
- ☐ The Timing Reference Sensor (TRS) and Synchronous Reference Sensor (SRS) are shared by the ECMs

 Copyright © 2001 DETROIT DIESEL CORPORATION

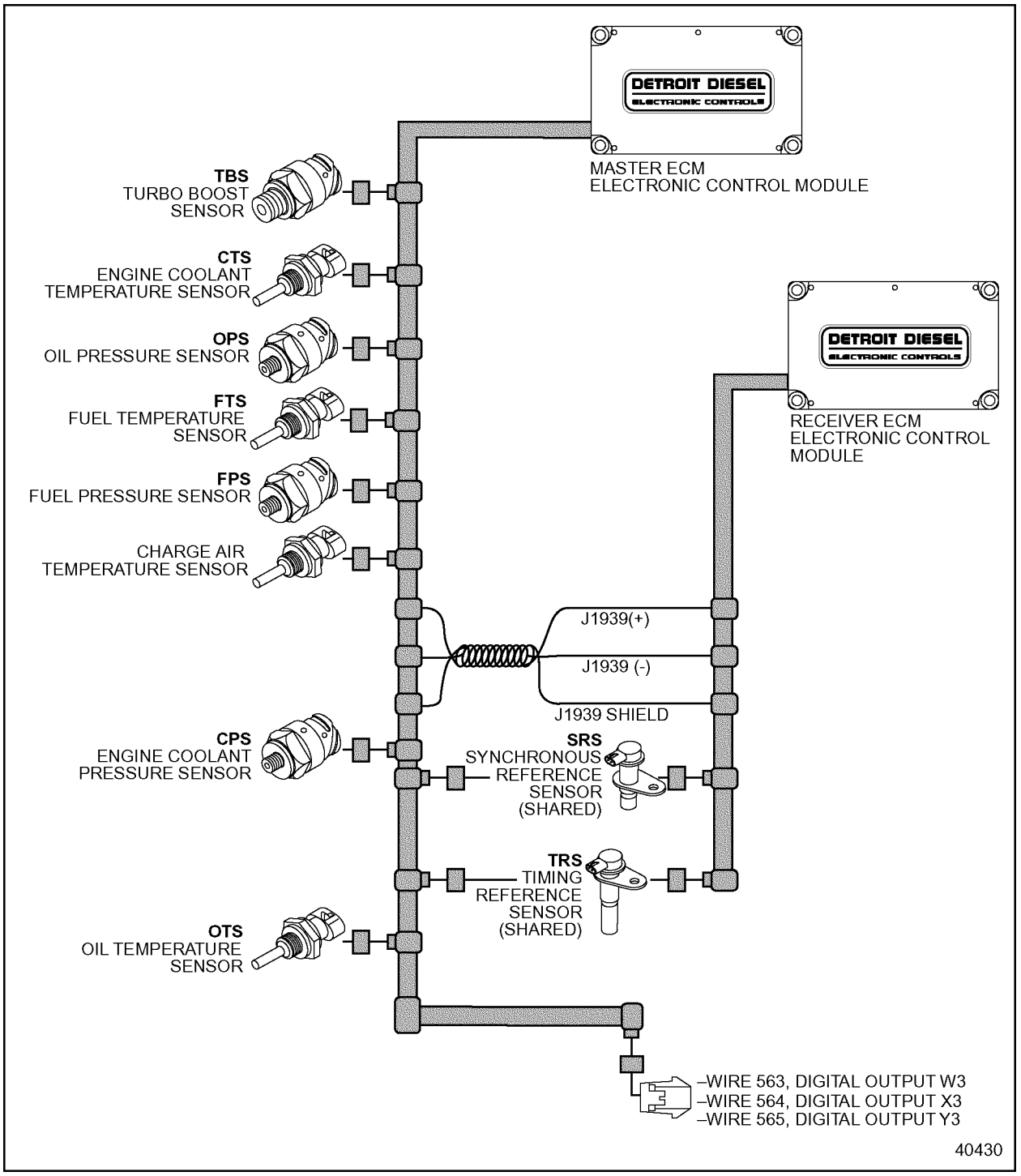

Figure 13-14 A Typical Series 2000 Multi-ECM Engine Sensor Harness

All information subject to change without notice.
7SA2000 0103 Copyright © 2001 DETROIT DIESEL CORPORATION

13.8 WELDING

Prior to any welding on the vehicle or equipment, the following precautions must be taken to avoid damage to the electronic controls and/or the engine (see Figure 13-15 and Figure 13-16).

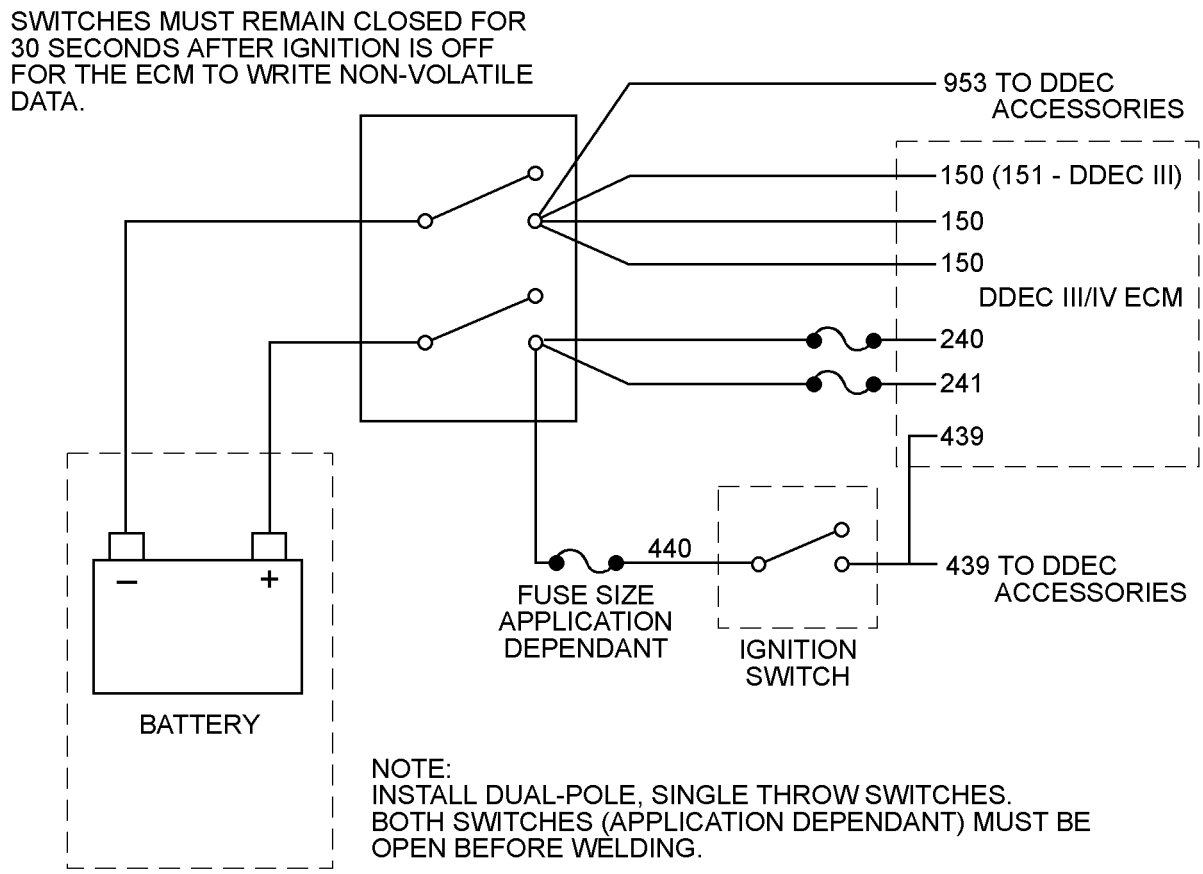

NOTICE:

When welding, the following must be done to avoid damage to the electronic controls or the engine:

- ❑ Both the positive (+) and negative (-) battery leads must be disconnected before welding.
- ❑ Ground cable must be in close proximity to welding location – engine must never be used as a grounding point.
- ❑ Welding on the engine or engine mounted components is NEVER recommended.

31236

Figure 13-15 Welding Precaution

 Copyright © 2001 DETROIT DIESEL CORPORATION

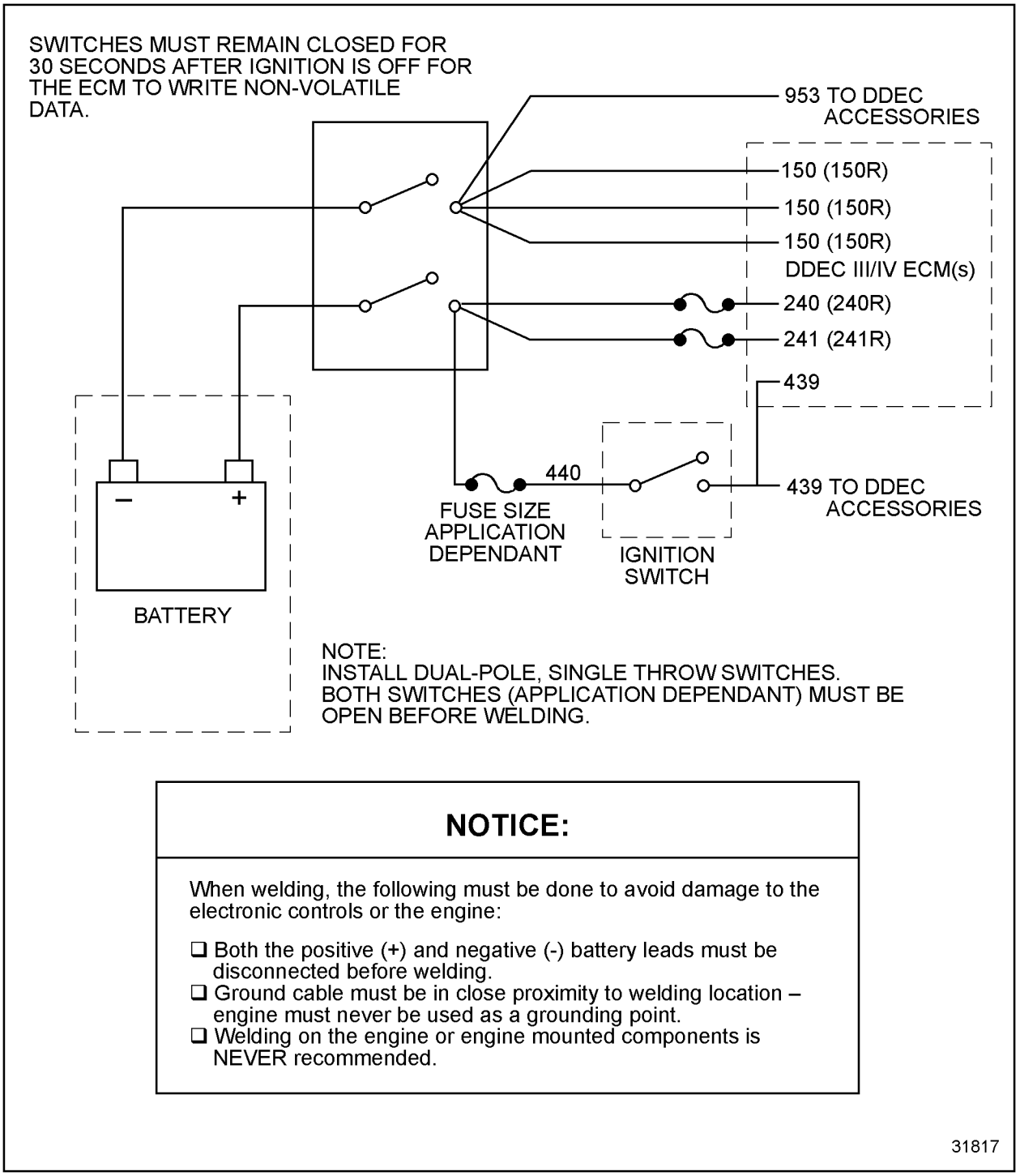

NOTICE:

When welding, the following must be done to avoid damage to the electronic controls or the engine:

- ❑ Both the positive (+) and negative (-) battery leads must be disconnected before welding.
- ❑ Ground cable must be in close proximity to welding location – engine must never be used as a grounding point.
- ❑ Welding on the engine or engine mounted components is NEVER recommended.

Figure 13-16 Welding Precaution - Multi-ECMs

All information subject to change without notice.
7SA2000 0103 Copyright © 2001 DETROIT DIESEL CORPORATION

14 TECHNICAL DATA

This information is currently available on the Power Evolution Network (PEN). A sample may be found in the following pages.

NOTE:
If you do not have access to PEN, contact your distributor to be given access.

 Copyright © 2001 DETROIT DIESEL CORPORATION

POWEREvolution Network

12V2000 - C & I Power & Torque Data Page

R1237K33 06N04M1310

Rated Power: 750 bhp @ 2100 r/min

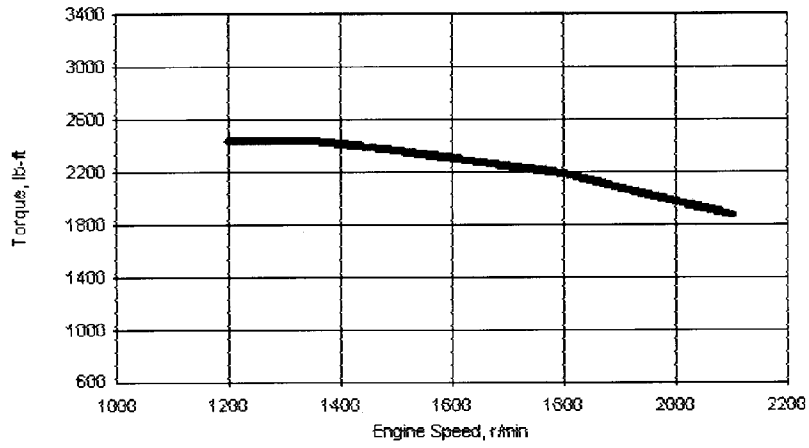

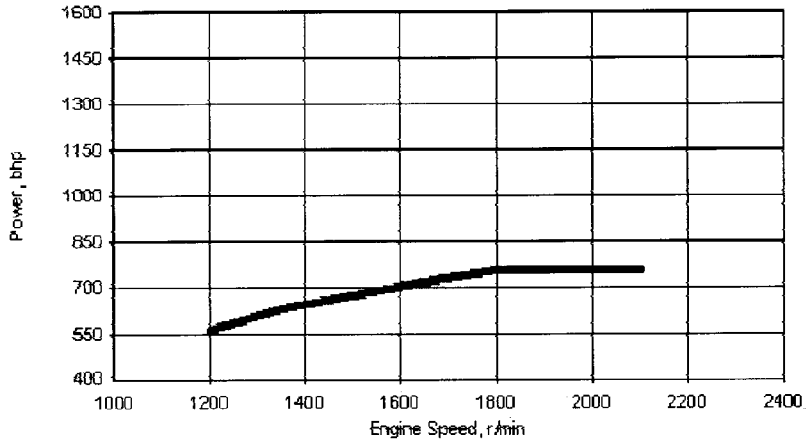

US Nonroad & EURO Nonroad (Stage I) certified

Engine Speed r/min	Power bhp (kW)	Torque lb-ft (N-m)
1200	558 (416)	2440 (3309)
1350	627 (467)	2438 (3306)
1500	674 (503)	2360 (3200)
1650	715 (533)	2276 (3086)
1800	750 (560)	2188 (2967)
1950	750 (560)	2020 (2739)
2100	750 (560)	1876 (2543)

Power output guaranteed at SAE J1995 conditions:
77°F (25°C) air inlet temperature
29.31 in. Hg (99 kPa) dry barometer
100°F (38°C) fuel inlet temperature
.853 specific gravity at 60°F (15°C)

Performance shown includes:
Air intake restriction: 10 in. H_2O (2.5 kPa)
Exhaust back pressure: 15 in. H_2O (3.7 kPa)

Inquiries should be sent to: Mark.Groeneweg@Detroitdiesel.com

Date Last Updated: 11/23/99
UNCONTROLLED COPY
The user is advised to check the PowerEvolution Network for latest information.

©1999-2000 Detroit Diesel Corporation - A DaimlerChrysler Company. All Rights Reserved.

41223

POWEREvolution Network

12V2000 - C & I	Technical Data Page
R1237K33	06N04M1310

Calibration Details

Rated Power	750 bhp
Rated Power Speed	2100 r/min
Peak Torque	2,440 lb-ft
Peak Torque Engine Speed	1200 r/min
High Idle Speed	2250 r/min
Low Idle Speed	600 r/min

Cooling System

Engine Heat Rejection to Coolant in the Engine Circuit	20350 Btu/min
Engine Radiated Heat Rejection	5000 Btu/min
Engine Radiated Heat Rejection at Peak Torque Engine Speed	
Total Engine Coolant Capacity	70.0 qt
Engine Circuit Coolant Flow	293 gal/min
Engine Circuit Coolant Flow at Peak Torque speed	
Minimum Engine Circuit Coolant Flow	264 gal/min
Minimum Engine Circuit Coolant Flow at Peak Torque speed	
Engine Coolant Circuit External Restriction	9 lb/in.^{2}
Engine Coolant Circuit External Restriction at Peak Torque speed	
Engine Water Pump Discharge Pressure without Pressure Cap	40 lb/in.^{2}
Engine Water Pump Discharge Pressure without Pressure Cap at Peak Torque speed	

All Values are at rated power and speed, unless otherwise specified.

Rated Power: 750 bhp @ 2100 r/min

Exhaust System

Exhaust Temperature	691 °F
Exhaust Temperature at Peak Torque Engine Speed	
Exhaust Flow	4,507 ft^3/min
Exhaust Flow at Peak Torque Engine Speed	

Fuel System

Fuel Injector / Pump	EUP
Fuel Consumption, Mass	271.7 lb/hr
Fuel Consumption, Volume	38.9 gal/hr
Fuel Spill Mass	2,058.5 lb/hr
Fuel Spill, Volume	294.5 gal/hr
Total Fuel Flow, Mass	2,330.2 lb/hr
Total Fuel Flow, Volume	333.4 gal/hr
Heat Rejection to Fuel	552 Btu/min

Intake System

Engine Air Flow	2,034 ft^3/min
Engine Air Flow at Peak Torque Engine Speed	
Turbo Compressor Out Temperature	
Intake Manifold Pressure	60.8 in. Hg

Lubrication System

Oil Flow	
Oil Flow at Peak Torque speed	
Oil Pressure	125 lb/in.^{2}
Oil Pressure at Low Idle Speed	40 lb/in.^{2}

Other Information

Compression Ratio	16 : 1
Mean Piston Speed	630 ft/min
Brake Mean Effective Pressure (BMEP)	194 lb/in.^{2}
Turbocharger	TMF-5505 (1.15 A/R)
Torque Available at 800 r/min	
Altitude Capability	10200 ft
Friction Power	162 hp
Friction Power at Peak Torque speed	57 hp

Inquiries should be sent to: Carl.Micu@Detroitdiesel.com

Date Last Updated: 8/14/98
UNCONTROLLED COPY
The user is advised to check the PowerEvolution Network for latest information.

©1999-2001 Detroit Diesel Corporation - A DaimlerChrysler Company. All Rights Reserved.

Rated Power: 750 bhp @ 2100 r/min

Cooling System

Minimum Water Pump Inlet Pressure with a Rapid Warm-up Radiator	0 lb/in.^{2}
Maximum Coolant Pressure Static Head	21.7 lb/in.^{2}
Minimum Top Tank Coolant Temperature	160 °F
Maximum Intercooler Coolant Out Temperature	
Maximum Ambient to Intercooler Coolant Out Temperature Rise	
Maximum Engine Coolant Out Temperature	210 °F
Minimum Coolant Fill Rate	3 gal/min
Minimum Drawdown Requirements	8 %
Maximum Deaeration Time	30 min
Maximum System Pressure (Exclusive of Pressure Cap)	21.7 lb/in.^{2}
Minimum Pressure Cap	14.0 lb/in.^{2}

Exhaust System

Maximum Back Pressure	3.0 in. Hg
Recommended Single Exhaust Pipe Diameter	
Recommended Dual Exhaust Pipe Diameter	

Electrical System

Maximum Resistance of Starting Circuit for a 24 Volt System	
Recommended Battery Capacity for a 24V System	

Fuel System

Secondary Fuel Filter Size	8 microns
Maximum Fuel Inlet Temperature	140 °F
Maximum Fuel Pump Suction for Clean System	6 in. Hg
Maximum Fuel Pump Suction for Dirty System	12 in. Hg
Maximum Fuel Return Pressure	
Recommended Primary Fuel Filter Size	

Intake System

Maximum Ambient to Turbo Compressor Inlet Temperature Rise	30 °F
Maximum Air Intake Restriction for a Clean Air Cleaner	12 in. H_2O
Maximum Air Intake Restriction for a Dirty Air Cleaner	20 in. H_2O
Maximum Intake Manifold Pressure	
Maximum Intake Manifold Temperature	
Maximum Ambient to Intake Manifold Temperature Differential	
Maximum Crankcase Pressure	2 in. H_2O
Recommended Single Intake Pipe Diameter	
Recommended Dual Intake Pipe Diameter	

Lubrication System

Remote Mounted Filters: Maximum Change in Oil Pressure from Engine Out to Oil Cooler Inlet	

Inquiries should be sent to: Carl.Micu@Detroitdiesel.com

Date Last Updated: 12/4/00
UNCONTROLLED COPY
The user is advised to check the PowerEvolution Network for latest information.

©1999-2001 Detroit Diesel Corporation - A DaimlerChrysler Company. All Rights Reserved.

Rated Power: 750 bhp @ 2100 r/min

Summary

Rated Power Speed, r/min	2100
Peak Torque Speed, r/min	1200
Certification Code (CWC)	5200
US Nonroad Certification	Yes
EURO Nonroad (Stage 1) Certification	Yes
MSHA Certification	No
CANMET Certification	No
Comments	

Steady-state Emission Summary, g/hr

NO_x	5,105
CO	170
HC	214
SO2	1,230
Particulates	

8-mode Emission Summary, g/bhp-hr

NOx	6.676
CO	0.757
HC	0.353
Particulates	

Smoke Summary, Bosch No.

Smoke at Rated Power Speed	0.3
Smoke at Peak Torque Speed	0.4

All values are at rated power speed, unless otherwise specified.

Inquiries should be sent to:Joana.Vardas@Detroitdiesel.com

Date Last Updated: 11/23/99
UNCONTROLLED COPY
The user is advised to check the PowerEvolution Network for latest information.

©1999-2001 Detroit Diesel Corporation - A DaimlerChrysler Company. All Rights Reserved.

12V2000 - C & I	Noise Data Page
R1237K33	06N04M1310

Rated Power: 750 bhp @ 2100 r/min

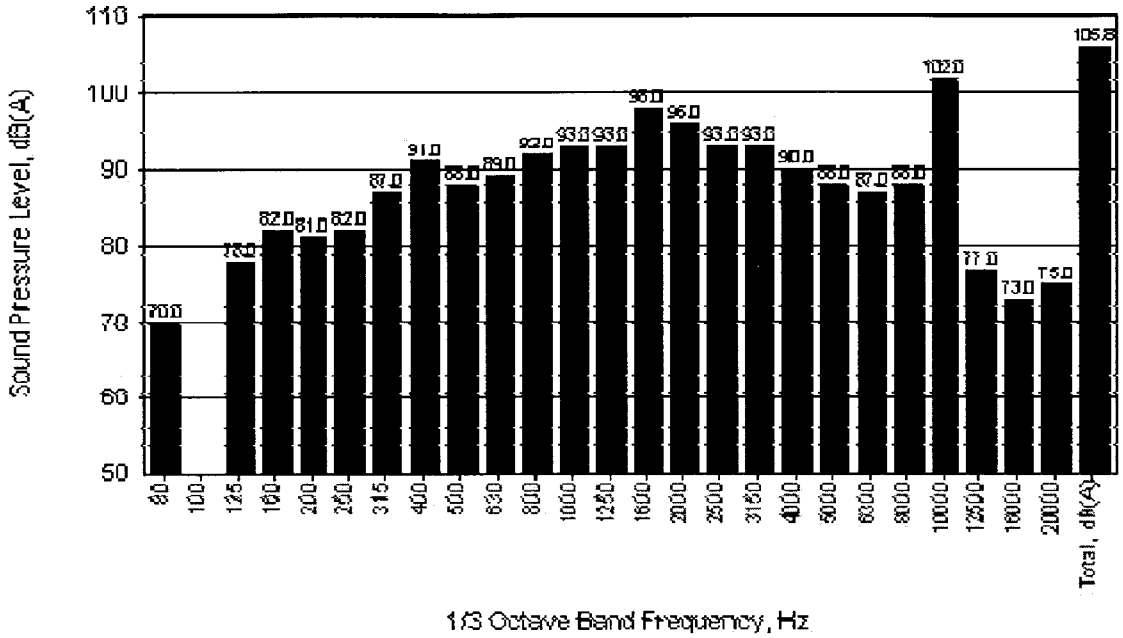

Nine microphones on a parallelepipedal surface at a distance of 1 m with a 20 µPa reference were used, consistent with DIN 45-635.

Data does not include intake or exhaust noise contributions.
Data is representative of a single unit.
Values may vary +1 dB(A).

Inquiries should be sent to:Carl.Micu@Detroitdiesel.com

Date Last Updated: 11/23/99
UNCONTROLLED COPY
The user is advised to check the PowerEvolution Network for latest information.

©1999-2001 Detroit Diesel Corporation - A DaimlerChrysler Company. All Rights Reserved.

Rated Power: 750 bhp @ 2100 r/min

Camshaft

Type	One-piece, gear-driven
Material	Steel Alloy
Journal Surface	Finish Ground
Lobe Surface	Finish Ground
Location	Center Vee

Camshaft Bearing

Type	One-piece
Bearing Material	Steel Back Shrink Fitted
Mean Journal Diameter	3.62 in.
Mean Effective Length	0.91 in.
Projected Area	3.28 in.^{2}

Connecting Rod

Type	Forged, Rectangular Cross-section
Material	Forged Steel

Connecting Rod Cap

Type	Angle Split-Cap Serrated Design
Material	Forged Steel Alloy

Connecting Rod Crank Pin Bearing

Type	Split Shell
Number (per journal)	2
Lower Bearing Material	Trimetal (Steel Backed Copper/Lead/Tin Material)
Upper Bearing Material	Split Tiered Aluminum/Tin Overlay
Mean Journal Diameter	3.90 in.
Mean Effective Length	1.42 in.
Projected Area	5.52 in.^{2}

Crankshaft

Type	One-piece
Material	Forged Steel
Journal Surface	Induction Hardened, Finish Ground
Type of Balance	Dynamic with Machined Bolt on Counterweigl
Vertical Load Limit on Crankshaft at Rear Face of Flywheel (The weight of the flywheel must be included with the OEM components.)	2,000 lb

Crankshaft Main Bearing

Type	Split Shell
Number (per journal)	2
Lower Bearing Material	Sputtered Aluminum and Tin Overlay
Upper Bearing Material	Trimetal (Steel Backed Copper/Led/Tin Matri:
Mean Journal Diameter	4.25 in.
Mean Effective Length	1.30 in.
Projected Area	5.52 in.^{2}

Crankshaft Thrust Bearing

Type	Two-piece
Number	4
Mean Journal Diameter	5.51 in.
Mean Effective Length	
Projected Area	
Load Limit Continuous	1,800 lb
Load Limit Intermittent	1,800 lb

Cylinder Block

Type	One-piece vee
Cylinder Block Material	Gray Cast Iron
Maximum Static Bending Moment at Rear Face of Block	1,000 ft-lb

Inquiries should be sent to:Carl.Micu@Detroitdiesel.com

Date Last Updated: 6/12/00
UNCONTROLLED COPY
The user is advised to check the PowerEvolution Network for latest information.

©1999-2001 Detroit Diesel Corporation - A DaimlerChrysler Company. All Rights Reserved.

Rated Power: 750 bhp @ 2100 r/min

Cylinder Head

Type	One per Cylinder
Material	Gray Cast Iron
Arrangement	Crossflow

Exhaust Valve

Type	Poppet
Number (per cylinder)	2
Arrangement	45 degrees
Material	Iron Alloy, 21-4N
Location	In Cylinder Head
Operating Mechanism	Pushrod Actuated Rocker
Type of Lifter	Roller Follower
Number of Valve Springs (per valve)	2

Exhaust Valve Insert

Type	Replaceable
Material	Iron Alloy

Intake Valve

Type	Poppet
Number (per cylinder)	2
Arrangement	Vertical
Material	Steel, gas nitrided
Location	In Cylinder Head
Operating Mechanism	Pushrod Actuated Rocker
Type of Lifter	Roller Follower
Number of Valve Springs (per valve)	2

Intake Valve Insert

Type	Replaceable
Material	Tribaloy

Liner

Type	Replaceable Wet Liner
Material	Centrifugally Cast High Alloy Iron

Piston

Type	One-piece
Crown Material	Aluminum, Hard Anodized
Skirt Material	Heat Treated High Alloy Aluminum
Cooling	Oil Spray Jet Cooling

Piston Pin

Type	Full Floating
Material	Steel
Wrist Pin Keepers	Snap Rings

Piston Pin Bearing

Type	None
Piston Pin Bearing Material	

Piston Ring Oil

Type	Two-piece Spring Loaded
Number (per piston)	1
Location	Below Compression Ring

Inquiries should be sent to: Carl.Micu@Detroitdiesel.com

©1999-2001 Detroit Diesel Corporation - A DaimlerChrysler Company. All Rights Reserved.

15 INSTALLATION DRAWINGS

This information is currently available on the Power Evolution Network (PEN). A sample may be found in the following pages.

NOTE:
To obtain access to PEN, contact your distributor to be given access.

 Copyright © 2001 DETROIT DIESEL CORPORATION

12V2000 - C&I R1237K33 — Engine Configuration Front View

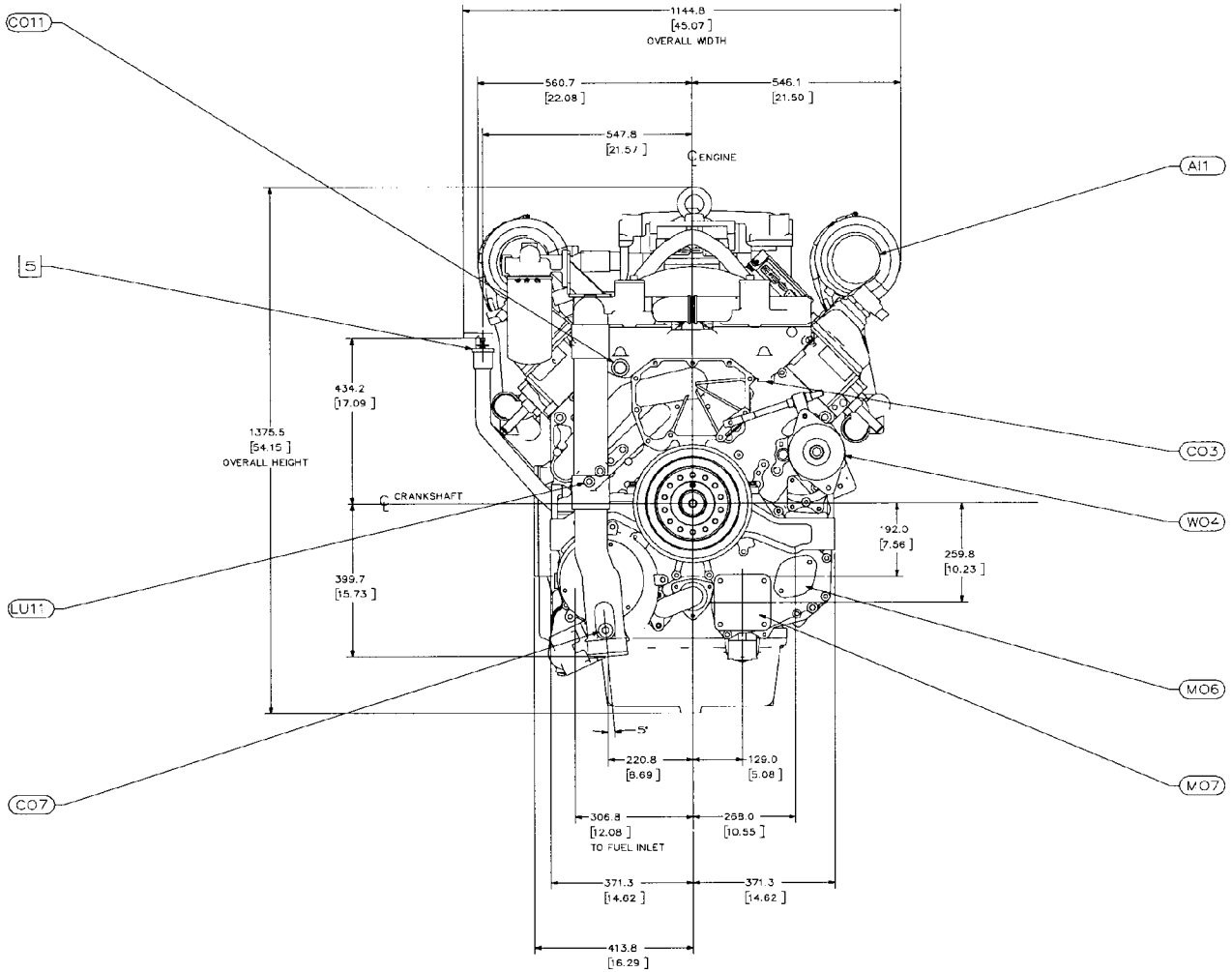

Data Last Updated: 17 APR 2000

All dimensions are in millimeters; bracketed dimensions are in inches.
Inquiries should be sent to: Carl.Micu@detroitdiesel.com

UNCONTROLLED COPY
The user is advised to check the PowerEvolution Network for the latest information.

POWEREvolution Network

12V2000 - C&I R1237K33 — Engine Configuration Left View

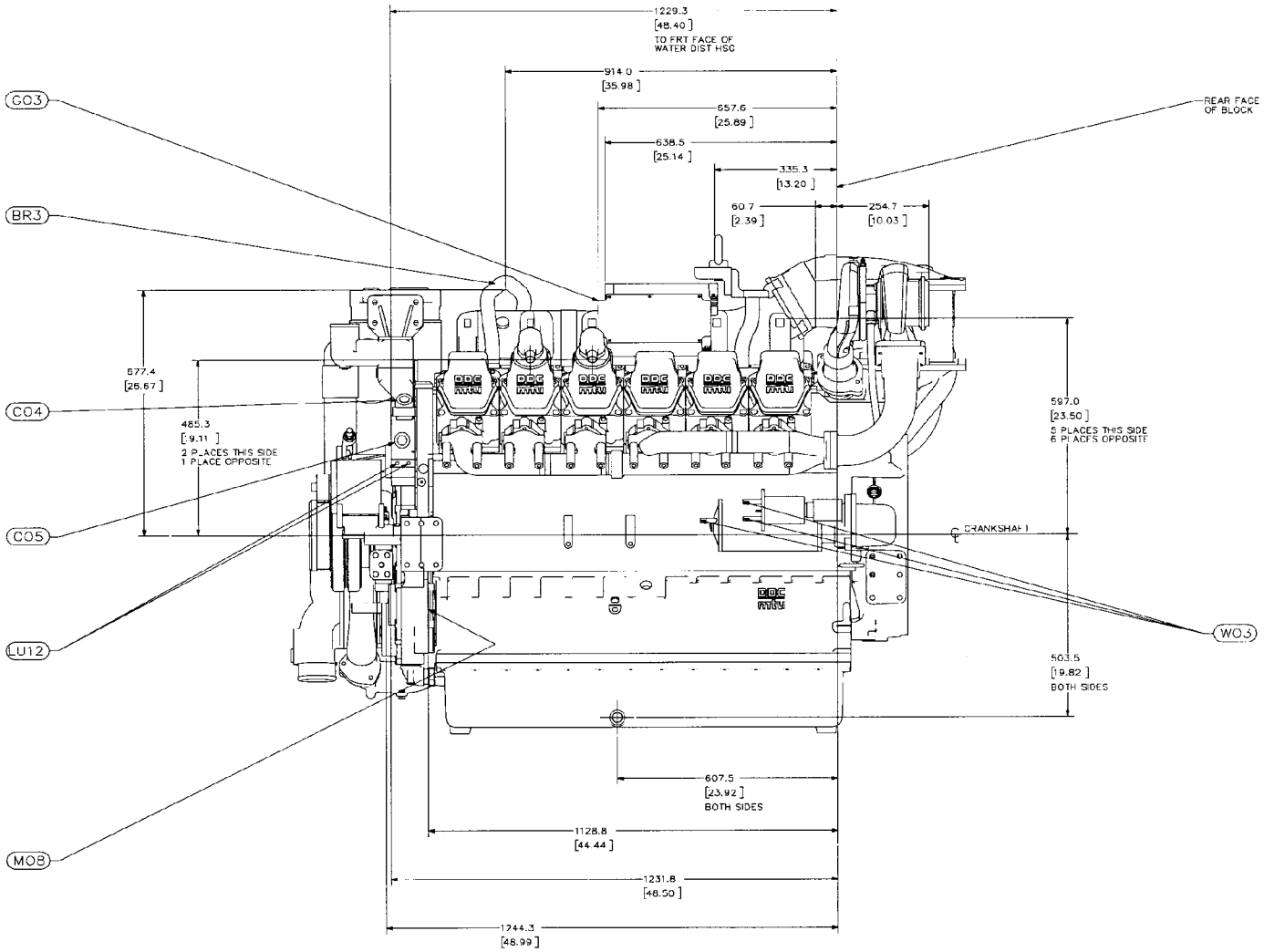

Data Last Updated: 17 APR 2000

All dimensions are in millimeters; bracketed dimensions are in inches.
Inquiries should be sent to: Carl.Micu@detroitdiesel.com

UNCONTROLLED COPY
The user is advised to check the PowerEvolution Network for the latest information.

41257

12V2000 - C&I R1237K33 — Engine Configuration Rear View

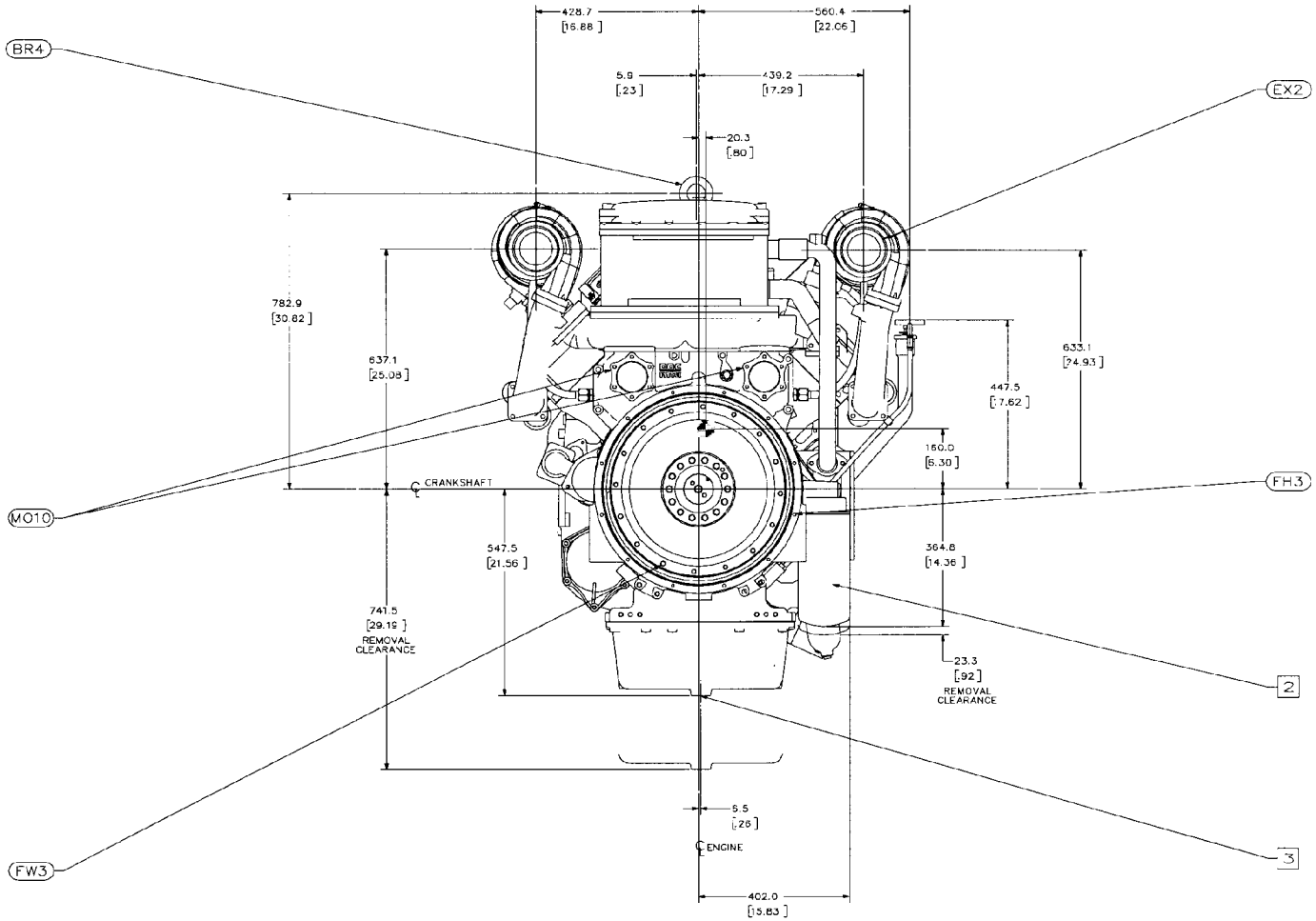

Center of Gravity (estimated)

Data Last Updated: 17 APR 2000

All dimensions are in millimeters; bracketed dimensions are in inches.
Inquiries should be sent to: Carl.Micu@detroitdiesel.com

UNCONTROLLED COPY
The user is advised to check the PowerEvolution Network for the latest information.

41258

12V2000 - C&I R1237K33 — Engine Configuration Right View

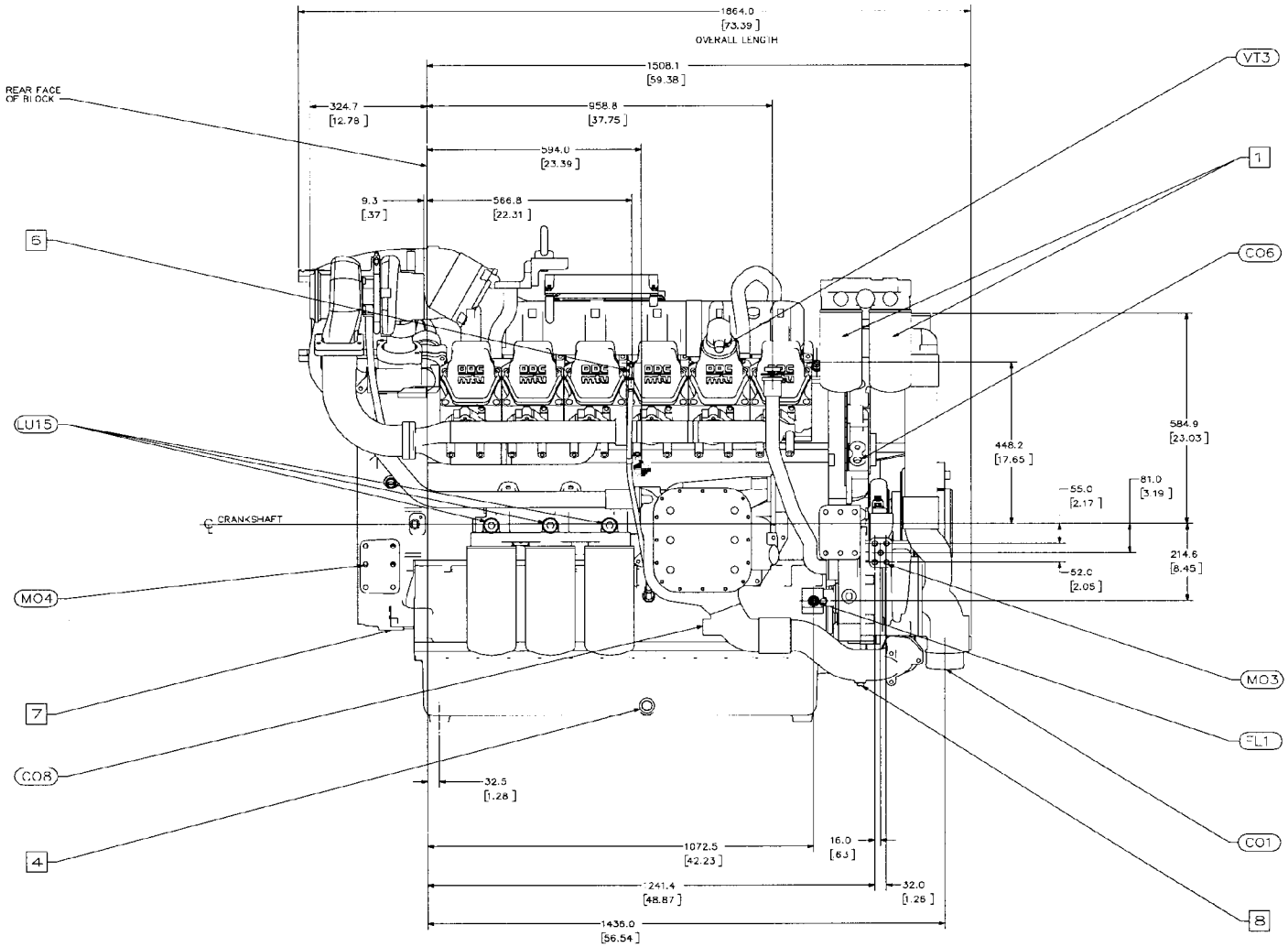

Center of Gravity (estimated)

Data Last Updated: 17 APR 2000

All dimensions are in millimeters; bracketed dimensions are in inches.
Inquiries should be sent to: Carl.Micu@detroitdiesel.com

UNCONTROLLED COPY
The user is advised to check the PowerEvolution Network for the latest information.

12V2000 - C&I R1237K33 Engine Configuration Top View

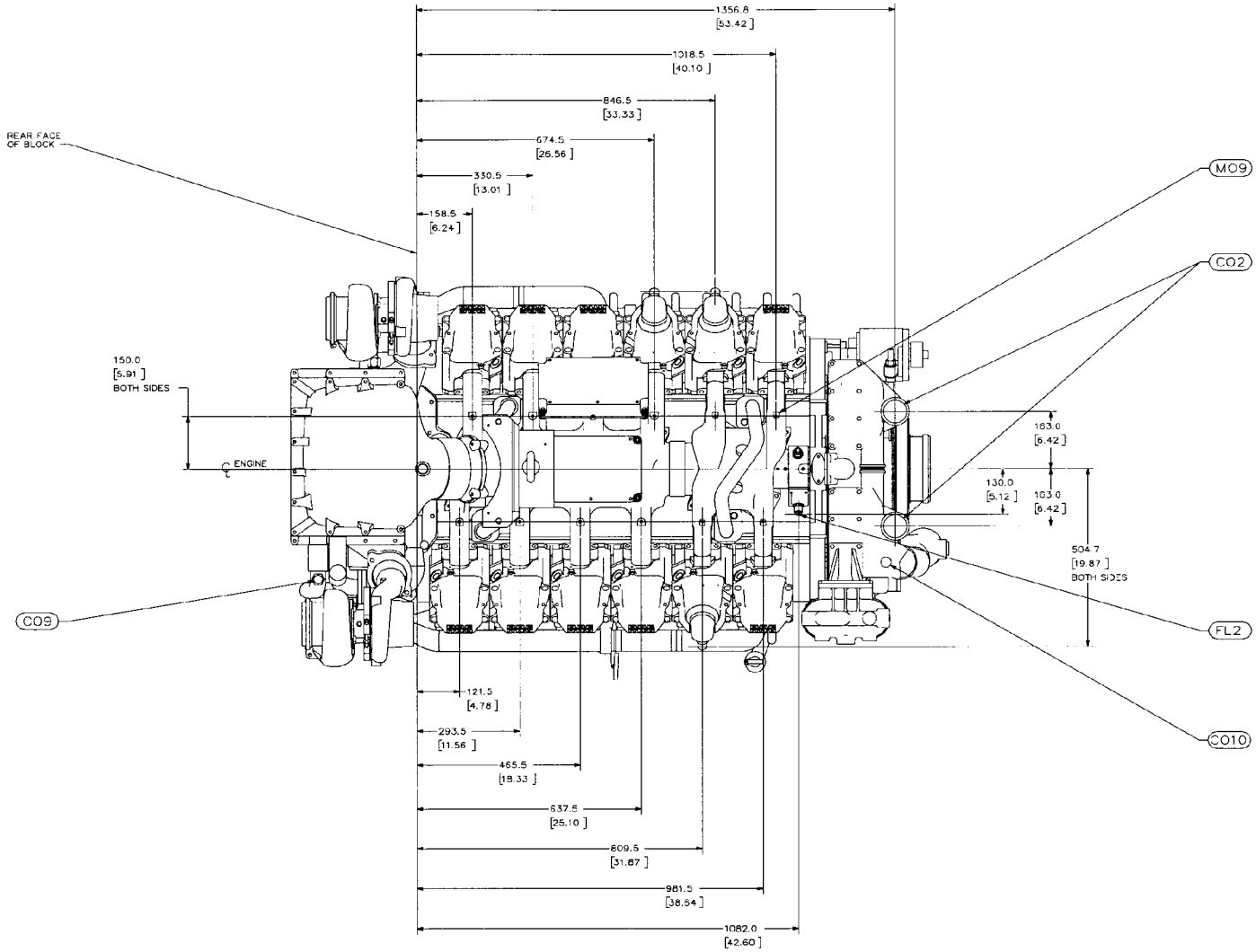

Data Last Updated: 17 APR 2000

All dimensions are in millimeters; bracketed dimensions are in inches.
Inquiries should be sent to: Carl.Micu@detroitdiesel.com

UNCONTROLLED COPY
The user is advised to check the PowerEvolution Network for the latest information.

16 OPTIONS

This information is currently available on the Power Evolution Network (PEN). A sample may be found in the following pages.

NOTE:
To obtain access to PEN, contact your distributor.

 Copyright © 2001 DETROIT DIESEL CORPORATION

Series 2000 | Option Information
06B00 1173 | Special Feature Summary

Flywheel Housing - SAE No. 1 (cast iron), Dry with Outboard Support Bearing

Torque Converter Access Hole	no
Barring-over Hole	no
Magnetic Pick-up	yes
DDEC	yes
MDEC	no
Accessories	yes
Semi-wet Housing	no
Bottom Drain	yes
Dual Starters	no
Oil Pan Attachment	yes

Data Last Updated: 24 JUL 2000

POWEREvolution Network

Series 2000 06B00 1173 — Option Information View

Flywheel Housing - SAE No. 1 (cast iron), Dry with Outboard Support Bearing

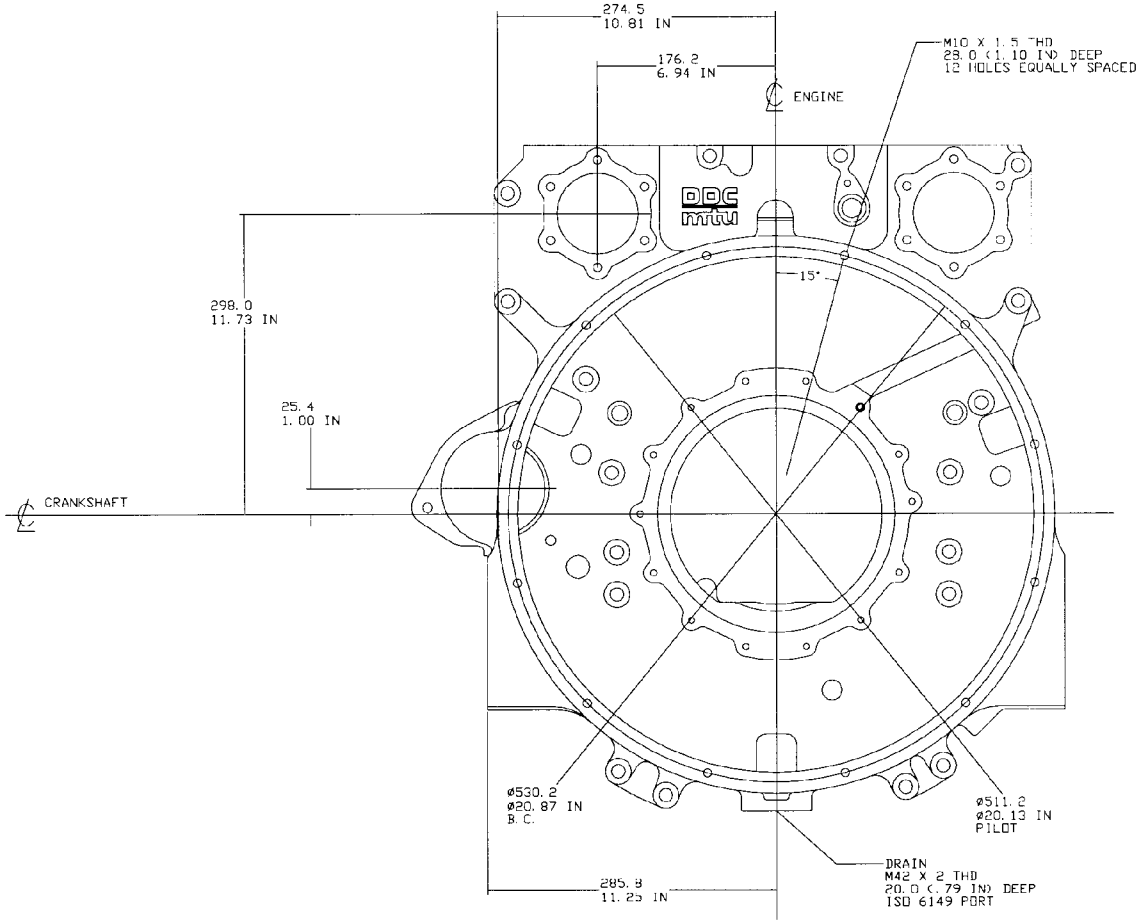

Note: Standard SAE J617 dimensions for pilot bore and bolt circle.

All dimensions are millimeters, except as indicated.
C & I and Gen Set inquiries should be sent to: Wesley.Clark@Detroitdiesel.com
Marine inquiries should be sent to: Carl.Micu@Detroitdiesel.com

Data Last Updated: 24 JUL 2000

UNCONTROLLED COPY
The user is advised to check the PowerEvolution Network for the latest information.

41262

POWEREvolution Network

Series 2000 06B00 1173 — Option Information Left View

Flywheel Housing - SAE No. 1 (cast iron), Dry with Outboard Support Bearing

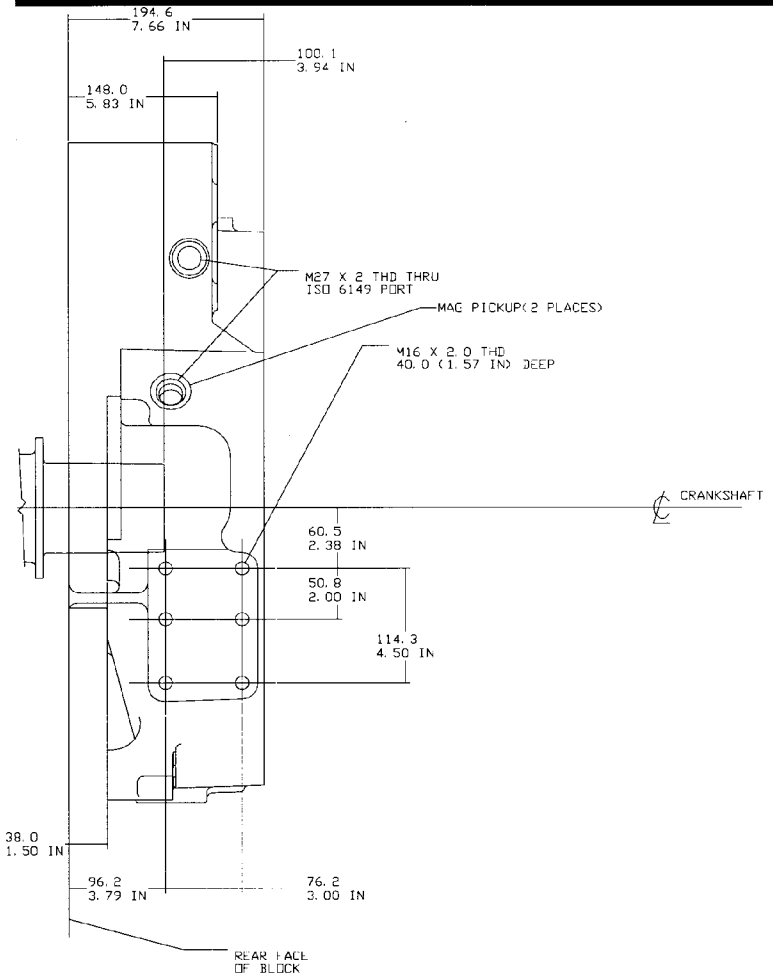

Note: Standard SAE J617 dimensions for pilot bore and bolt circle.

All dimensions are millimeters, except as indicated.
C & I and Gen Set inquiries should be sent to: Wesley.Clark@Detroitdiesel.com
Marine inquiries should be sent to: Carl.Micu@Detroitdiesel.com

Data Last Updated: 24 JUL 2000

UNCONTROLLED COPY
The user is advised to check the PowerEvolution Network for the latest information.

41263

Series 2000 06B00 1173 — Option Information Enlarged Views

Flywheel Housing - SAE No. 1 (cast iron), Dry with Outboard Support Bearing

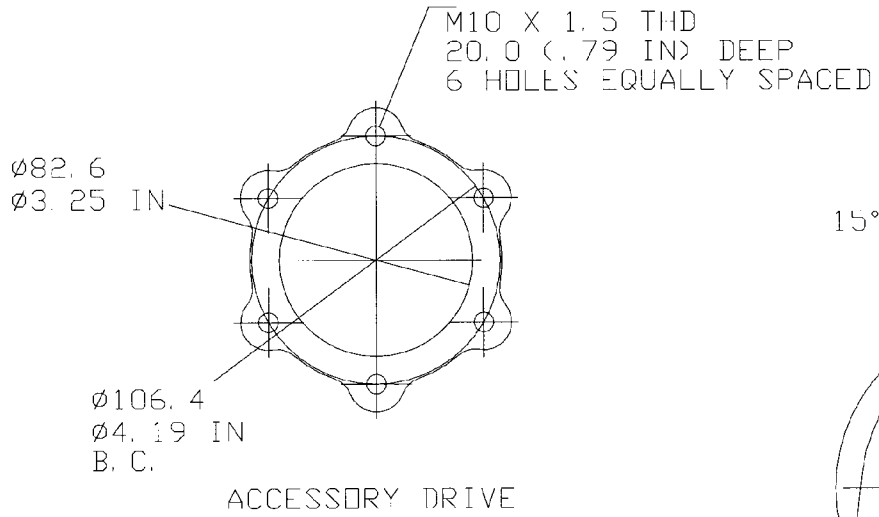

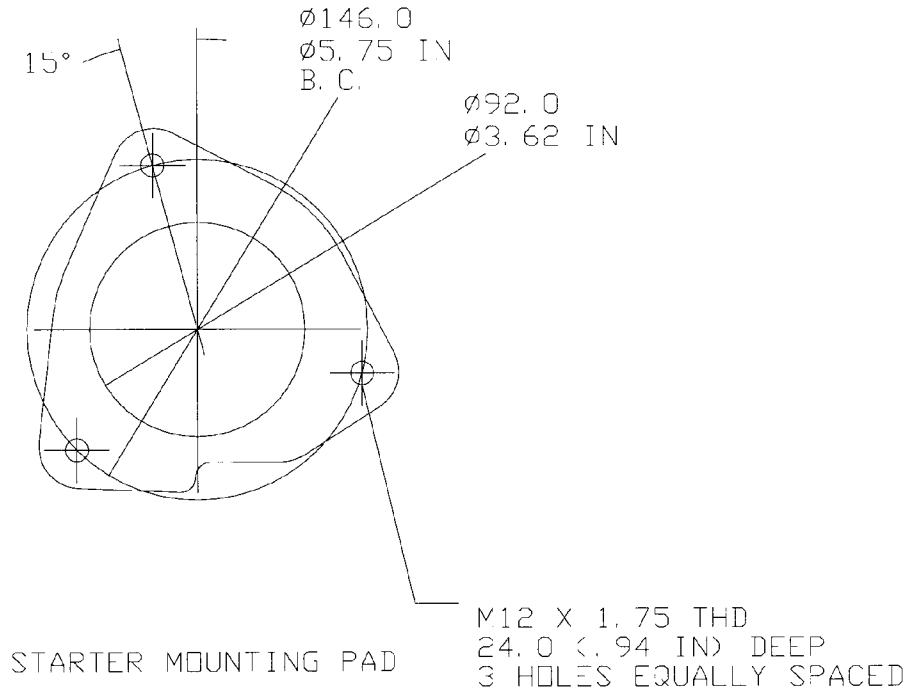

Note: Standard SAE J617 dimensions for pilot bore and bolt circle.

All dimensions are millimeters, except as indicated.
C & I and Gen Set inquiries should be sent to: Wesley.Clark@Detroitdiesel.com
Marine inquiries should be sent to: Carl.Micu@Detroitdiesel.com

Data Last Updated: 24 JUL 2000

UNCONTROLLED COPY
The user is advised to check the PowerEvolution Network for the latest information.

POWEREvolution Network

Series 2000 06B00 1173 — Option Information Availability Summary

Flywheel Housing - SAE No. 1 (cast iron), Dry with Outboard Support Bearing

Usage	Model	Group Availability (Effectivity Date)
C&I	R0837K32	Available
	R0837K33	Available
	R0837K37	Available
	R1237K33	Discontinued 26 MAR 1998
	R1237K37	Not Available
	R1637K33	Not Available
	R1637K37	Not Available
Genset	R0837K05	Available
	R0837K06	Available
	R0837K08	Available
	R0837K35	Available
	R0837K36	Available
	R0837K38	Available
	R1237K05	Discontinued 26 MAR 1998
	R1237K06	Not Available
	R1237K08	Discontinued 26 MAR 1998
	R1237K35	Not Available
	R1237K36	Not Available
	R1237K38	Discontinued 26 MAR 1998
	R1637K05	Not Available
	R1637K06	Not Available
	R1637K08	Not Available
	R1637K35	Not Available
	R1637K36	Not Available
	R1637K38	Not Available

Usage	Model	Group Availability (Effectivity Date)
Marine	R0827K02	Not Available
	R0827K03	Not Available
	R0827K04	Not Available
	R0827K05	Not Available
	R0827K20	Available
	R0827K21	Available
	R0827K22	Not Available
	R0827K23	Not Available
	R0827K24	Available
	R0827K25	Available
	R1227K02	Not Available
	R1227K03	Not Available
	R1227K04	Not Available
	R1227K05	Not Available
	R1227K12	Not Available
	R1227K13	Not Available
	R1227K20	Not Available
	R1227K21	Not Available
	R1227K22	Not Available
	R1227K23	Not Available
	R1627K02	Not Available
	R1627K03	Not Available
	R1627K04	Not Available
	R1627K05	Not Available
	R1627K20	Not Available
	R1627K21	Not Available
	R1627K22	Not Available
	R1627K23	Not Available

Data Last Updated: 02 JAN 2001

UNCONTROLLED COPY

C & I and Gen Set inquiries should be sent to: Wesley.Clark@Detroitdiesel.com
Marine inquiries should be sent to: Carl.Micu@Detroitdiesel.com

The user is advised to check the PowerEvolution Network for the latest information.

41265

17 ACCESSORY DRIVES

The Accessory Drives located on the flywheel housing are listed in Table 17-1 and listed in Table 17-2.

Accessory/Location Flywheel Housing*	Drive Ratio	Rotation (as viewed from rear of engine)	Shaft Coupling (SAE Spline)	Drive Type (SAE Flange)	Capacity in lb·ft @ 2100 rpm	Option Group	Comments
Accessory Drive LHS of Engine Facing Forward - Position G	1.13	CCW	B-B 15T	Bolted B	270 (122 hp)	6X4 0631	Only available on SAE #0 Flywheel Housings (Cast Iron)
Accessory Drive LHS of Engine Facing Forward - Position G	1.13	CCW	B 13T	Bolted B	270 (122 hp)	6X4 0645	Only available on SAE #0 Flywheel Housings (Cast Iron)
Accessory Drive LHS of Engine - Position A	1.35	CCW	A 9T	Bolted A	46 (25 hp)	6X4 0638 0657	Only available on SAE #1 Flywheel Housing (Aluminum)
Accessory Drive LHS of Engine - Position A	1.35	CCW	B-B 15T	Bolted B	46 (25 hp)	6X4 0637 0656	Only available on SAE #1 Flywheel Housing (Aluminum)
Accessory Drive LHS of Engine - Position A	1.35	CCW	B 13T	Bolted B	46 (25 hp)	6X4 0640 0658	Only available on SAE #1 Flywheel Housing (Aluminum)
Accessory Drive LHS of Engine - Position A	1.21	CCW	A 11T	Bolted A	52 (25 hp)	6X4 0649	Only available on SAE #1 Flywheel Housing (Cast Iron)
Accessory Drive RHS of Engine - Position C	1.21	CCW	A 11T	Bolted A	52 (25 hp)	6X4 0650	Only available on SAE #1 Flywheel Housing (Cast Iron)

* Maximum combined rear engine PTO not to exceed 150 hp

Table 17-1 Series 2000 Accessory Drives on Flywheel Housing

 Copyright © 2001 DETROIT DIESEL CORPORATION

Accessory/Location Flywheel Housing*	Drive Ratio	Rotation (as viewed from rear of engine)	Shaft Coupling (SAE Spline)	Drive Type (SAE Flange)	Capacity in lb·ft @ 2100 rpm	Option Group	Comments
Accessory Drive LHS of Engine - Position A	1.21	CCW	A 9T	Bolted A	52 (25 hp)	6X4 0647	Only available on SAE #1 Flywheel Housing (Cast Iron)
Accessory Drive RHS of Engine - Position C	1.21	CCW	A 9T	Bolted A	52 (25 hp)	6X4 0648	Only available on SAE #1 Flywheel Housing (Cast Iron)
Accessory Drive LHS of Engine - Position A	1.21	CCW	B 13T	Bolted B	52 (25 hp)	6X4 0651	Only available on SAE #1 Flywheel Housing (Cast Iron)
Accessory Drive RHS of Engine - Position C	1.21	CCW	B 13T	Bolted B	52 (25 hp)	6X4 0652	Only available on SAE #1 Flywheel Housing (Cast Iron)
Accessory Drive LHS of Engine - Position A	1.21	CCW	B-B 15T	Bolted B	52 (25 hp)	6X4 0653	Only available on SAE #1 Flywheel Housing (Cast Iron)
Accessory Drive RHS of Engine - Position C	1.21	CCW	B-B 15T	Bolted B	52 (25 hp)	6X4 0654	Only available on SAE #1 Flywheel Housing (Cast Iron)

* Maximum combined rear engine PTO not to exceed 150 hp

Table 17-2 Series 2000 Accessory Drives on Flywheel Housing

All information subject to change without notice.
7SA2000 0103 Copyright © 2001 DETROIT DIESEL CORPORATION

See Figure 17-1 for the accessory drives on the flywheel housing at the rear of the engine.

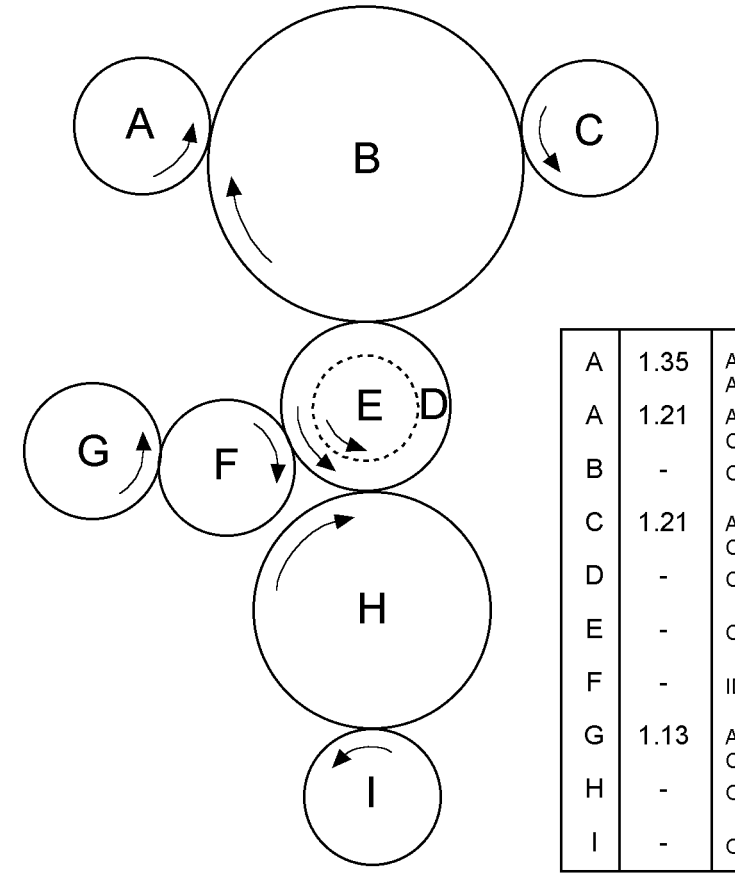

A	1.35	ACCESSORY DRIVE GEAR - ALUMINUM SAE#1 F/W HOUSING
A	1.21	ACCESSORY DRIVE GEAR - CAST IRON SAE#1 F/W HOUSING
B	-	CAMSHAFT DRIVE GEAR
C	1.21	ACCESSORY DRIVE GEAR - CAST IRON SAE#1 F/W HOUSING
D	-	CRANKSHAFT HUB GEAR
E	-	CRANKSHAFT GEAR
F	-	IDLER GEAR
G	1.13	ACCESSORY DRIVE GEAR - CAST IRON SAE#0 F/W HOUSING
H	-	OIL PUMP IDLER GEAR
I	-	OIL PUMP GEAR

REAR OF ENGINE
ACCESSORY DRIVES ON FLYWHEEL HOUSING

35417

Figure 17-1 Drive Ratio and Accessory Load Information - Rear of Engine

 Copyright © 2001 DETROIT DIESEL CORPORATION

The Accessory Drives located on the gear case housing are listed in Table 17-3.

Accessory/Location Gear Case Housing*	Drive Ra-tio	Rotation (as viewed from rear of engine)	Shaft Coupling (SAE Spline)	Drive Type (SAE Flange)	Capacity in lb·ft @ 2100 rpm	Option Group	Comments
Air Compressor LHS on Rear of Gear Case - Position M	1	CCW	A 9T	Bolted A Front	45 (18 hp)	6X4 641	Compressor gear may be used to drive PTO off of Front SAE A flange†
Accessory Drive LHS on Rear of Gear Case - Position M	1	CCW	A 9T	Bolted A Front A Rear	68 (27 hp)	6X4 642	Mounted in air compressor location‡
Accessory Drive LHS on Rear of Gear Case - Position M,	1	CCW	B 13T	Bolted A Front B Rear	68 (27 hp)	6X4 643	Mounted in air compressor location‡
Accessory Drive Freon Compressor M	--	--	--	--	--	6X4 0655	Belt Driven
Main PTO Front Crankshaft	--	CCW	--	--	8V-2000 lb·ft§ 12V-1500 lb·ft 16V-1650 lb·ft Preliminary	--	Torsional loads only

* Maximum combined front engine PTO not to exceed 70 hp
† Maximum combined PTO of air compressor and SAE A front drive not to exceed 27 hp
‡ Maximum combined PTO of accessory drive A or B rear plus A front not to exceed 27 hp
§ 8V- 2000 lb·ft normal application, 1000 if driven component represents shock loads

Table 17-3 Series 2000 Accessory Drives on Gear Case Housing

All information subject to change without notice.
7SA2000 0103 Copyright © 2001 DETROIT DIESEL CORPORATION

See Figure 17-2 for the accessory drives on the gear case housing at the front of the engine.

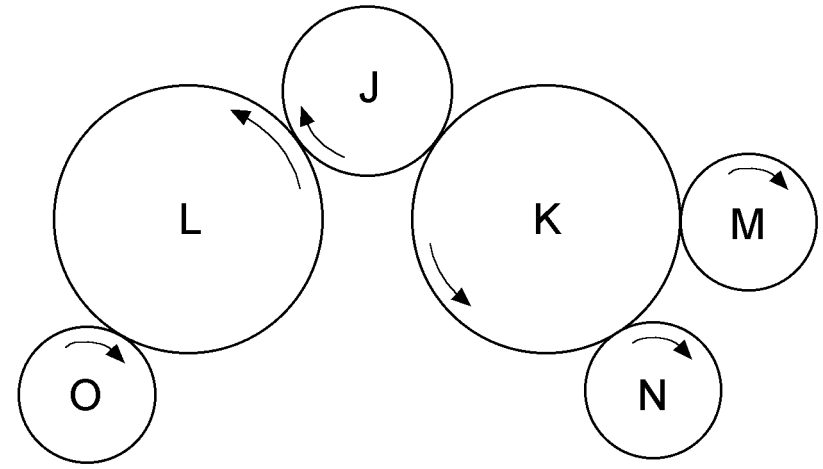

FRONT OF ENGINE
(LOOKING FROM FRONT)
ACCESSORY DRIVES ON GEAR CASE HOUSING

J	-	CRANKSHAFT GEAR
K	-	LEFT BANK IDLER GEAR
L	-	RIGHT BANK IDLER GEAR
M	1	AIR COMPRESSOR / ACCESSORY DRIVE GEAR
N	1.1	SCCC WATER PUMP / ACCESSORY DRIVE GEAR
O	-	WATER PUMP GEAR

35418

Figure 17-2 Drive Ratio and Accessory Load Information - Front of Engine

 Copyright © 2001 DETROIT DIESEL CORPORATION

17.1 BENDING MOMENT

The bending moment (**M**) on the front of the crank equals force (**F**) times distance (**L**) from the front face of the block. The force is usually caused by belt tension on the crankshaft pulleys (see Figure 17-3).

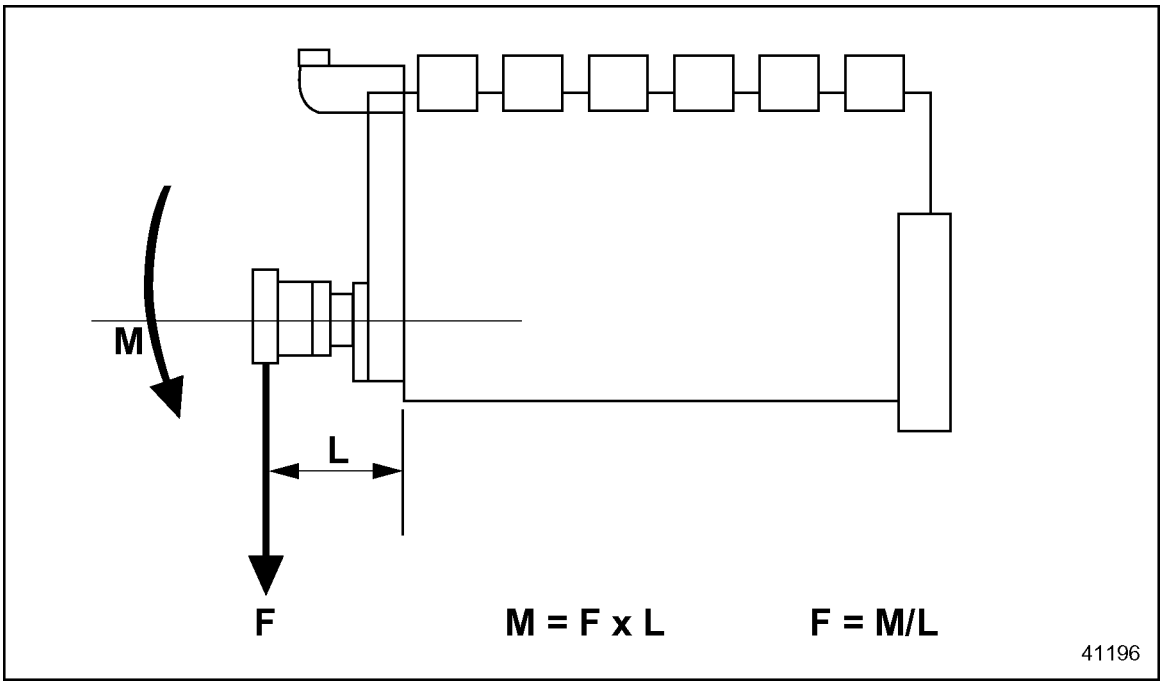

Figure 17-3 Bending Moment on the Front of the Crank

The maximum allowable bending moment varies at different directions around the crank when viewed from the front of the engine (see Figure17-4 for an 8V engine, see Figure 17-5 for a 12V engine, and see Figure 17-6 for a 16V engine).

All information subject to change without notice.
7SA2000 0103 Copyright © 2001 DETROIT DIESEL CORPORATION

The bending moment is in ft lb and referenced from the front face of the block (see Figure 17-4).

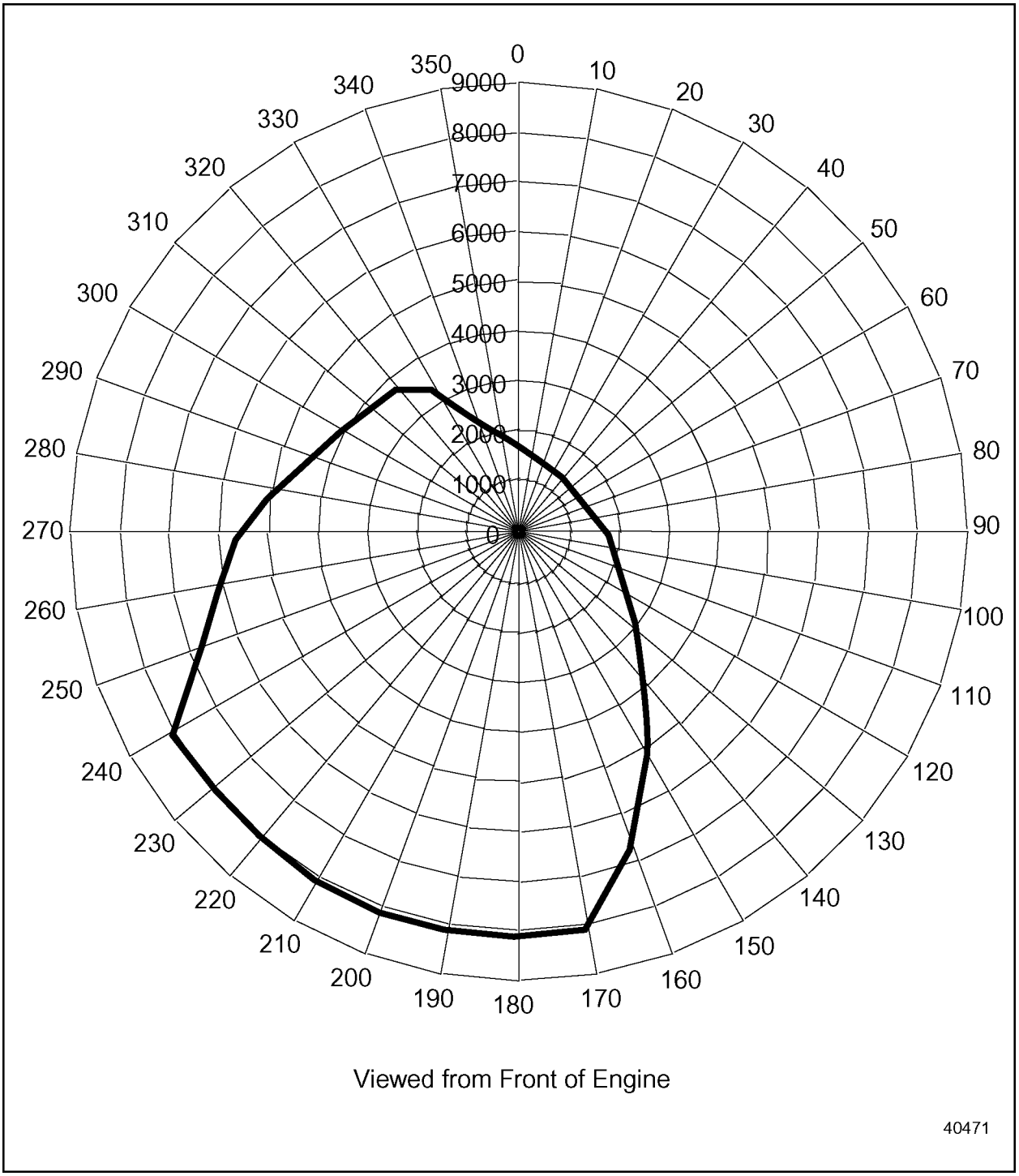

Figure 17-4 Front Crankshaft Maximum Allowable Bending Moment Diagram for a Series 2000 - 8V with Front Outboard Support Bearing

 Copyright © 2001 DETROIT DIESEL CORPORATION

The bending moment is in ft lb and referenced from the front face of the block (see Figure 17-5).

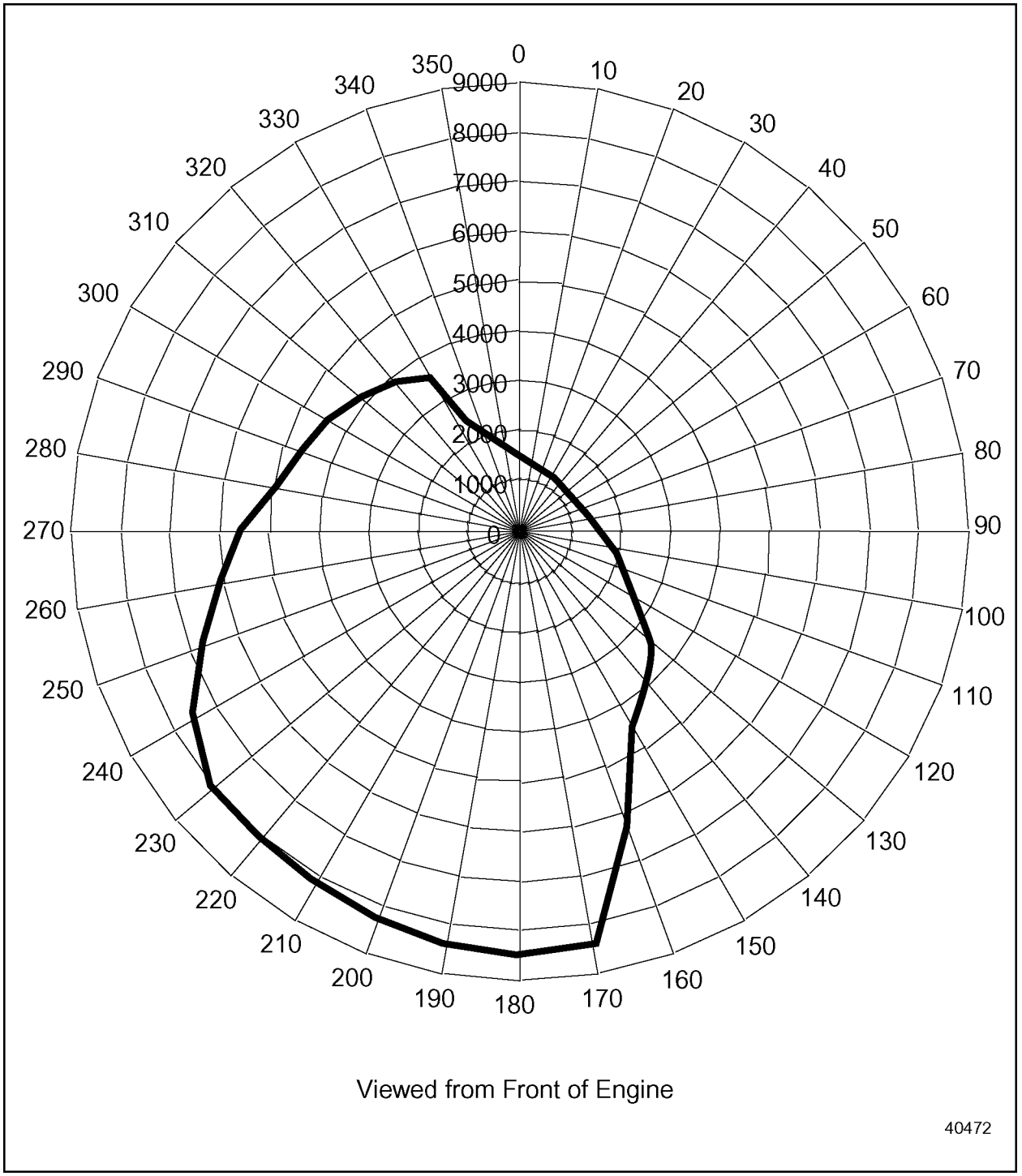

Figure 17-5 Front Crankshaft Maximum Allowable Bending Moment Diagram for a Series 2000 - 12V with Front Outboard Support Bearing

All information subject to change without notice.
7SA2000 0103 Copyright © 2001 DETROIT DIESEL CORPORATION

The bending moment is in ft lb and referenced from the front face of the block (see Figure 17-6).

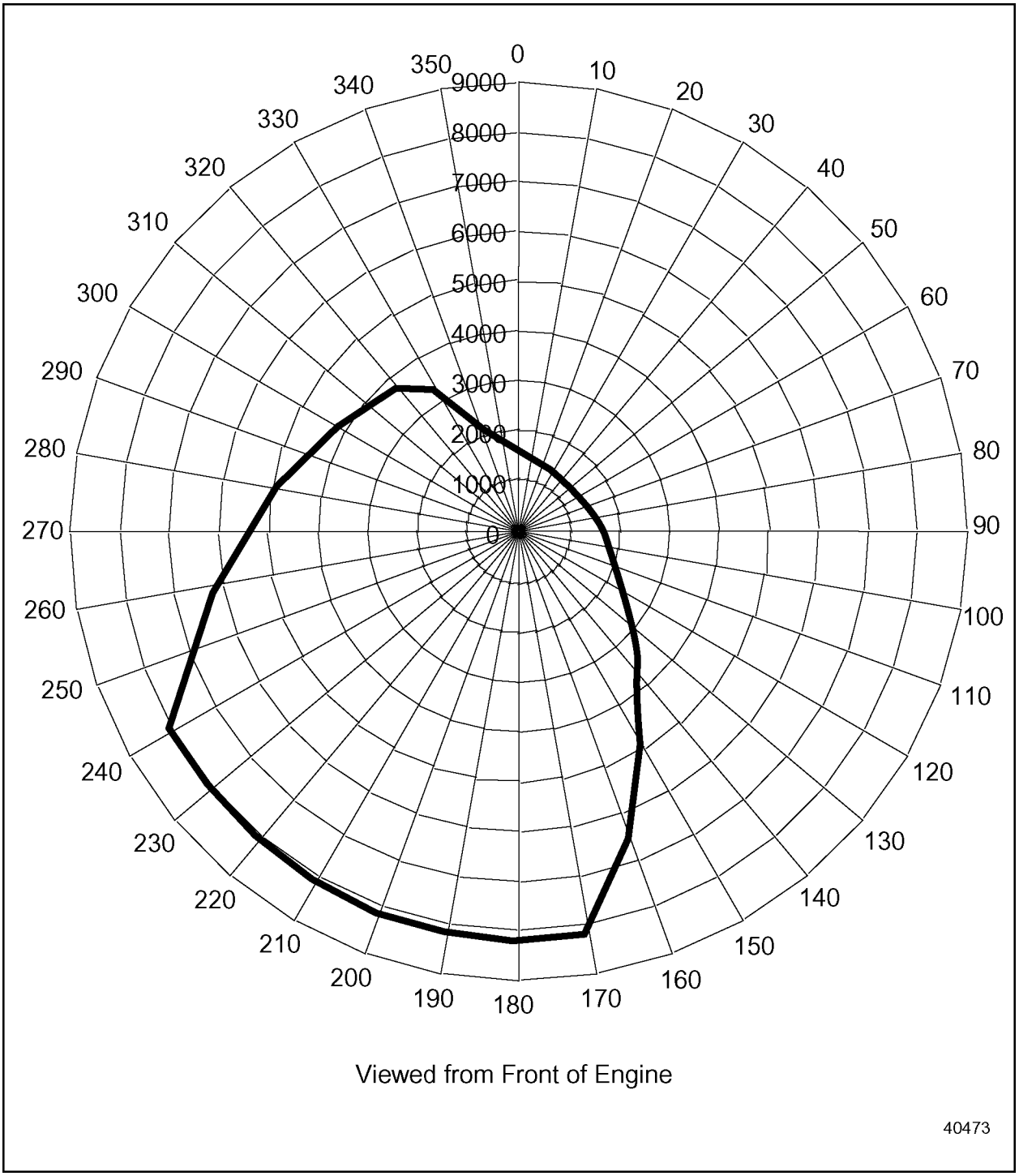

Figure 17-6 Front Crankshaft Maximum Allowable Bending Moment Diagram for a Series 2000 - 16V with Front Outboard Support Bearing

 Copyright © 2001 DETROIT DIESEL CORPORATION

To calculate the maximum force (**F**) at a given angled direction:

1. Determine the direction the force is to be applied.
2. Find the moment (**M**) from the correct figure (see Figure17-4 for an 8V engine, see Figure 17-5 for a 12V engine, and see Figure 17-6 for a 16V engine).
3. Divide by the distance (**L**) to get maximum force (**F**).

An example of the calculation for maximum force (**F**) at a given angled direction follows:

1. Find the net belt tension at the 90° position for a 12V Series 2000 engine (see Figure 17-7)

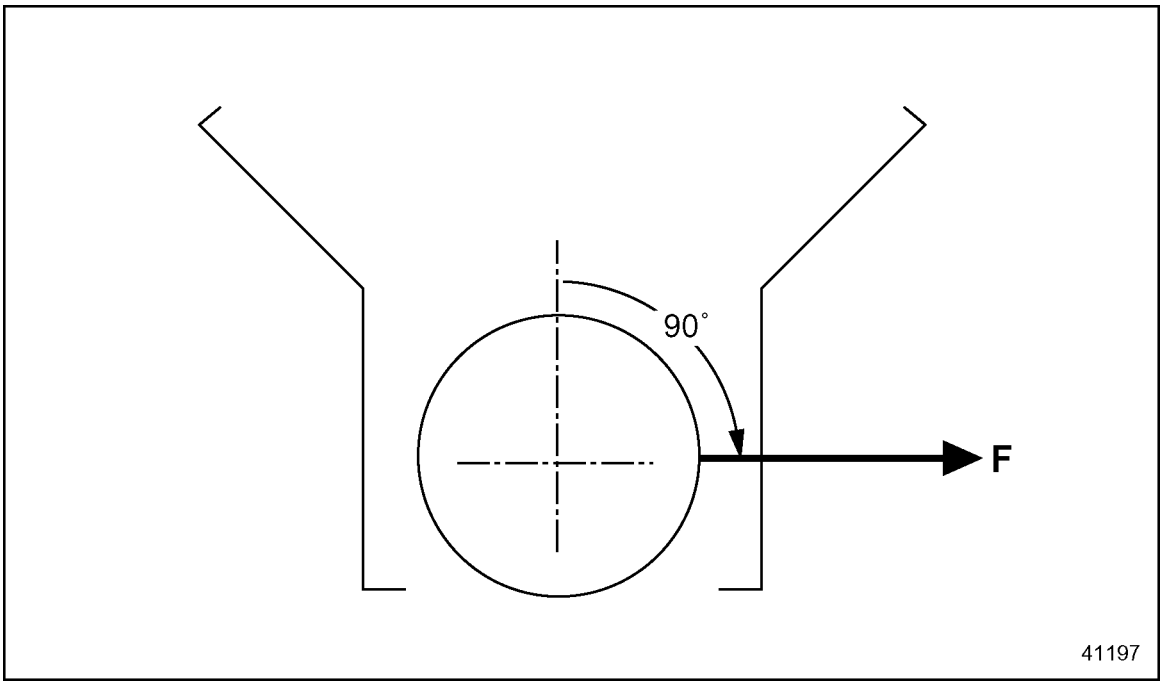

Figure 17-7 Net Belt Tension at the 90° Position

2. Determine **M**for a 12V Series 2000 engine (see Figure 17-5). **M** max = 1600
3. **L** has been determined to be 13.5 inches (1.12 ft) so using **F = M/L** or 1600/1.12 = 1333 lb **F**. Therefore the net total static belt tension (each leg of the belt x 2) should be no more than 1333 lb at the 90° position of the crank pulley.

If there are fan belts and other accessories, then the combined net force should be calculated at its resultant direction. Contact DDC Application Engineering for assistance.

All information subject to change without notice.
7SA2000 0103 Copyright © 2001 DETROIT DIESEL CORPORATION

APPENDIX A: PROJECT FORM / ORDER INFORMATION

The DDC/MTU Series 2000 Project Form (see page A-) is used by DDC to evaluate new sales inquiries.

Engine performance, durability, and feature compatibility are three areas that are very important when DDC reviews the inquiry. All inquiries will be reviewed and responded to within approximately one week. Project engineering resources and scheduling requirements will be evaluated per inquiry. Following review, DDC will assist in completing an engine specification and quotation.

 Copyright © 2001 DETROIT DIESEL CORPORATION

DDC/MTU Series 2000 & MTU/DDC Series 4000 Project Form

(DDC Assign)

REQ #: REQ File=Engine Inquiry. Prior to sale.

REP #: REP File=Engine Project. Following approval and sales order.

Project Type: Pricing Prototype Production

Customer / Application:			
Equipment Model/ Description:			
New Equipment or Repower:			
Current Engine (if applicable) Model:	Engine Rating: Peak Torque:	bhp @ lb-ft	rpm
Proposed Engine Model:	Engine Rating: Peak Torque:	bhp @ lb-ft	rpm
Pricing Date Required:			
	Volumes		
Year/Date			
Prototype			
Production			
Comments:			
Name		Phone	Date
Originator:			

FOR DDC USE ONLY		
Name	Phone	Date
Sales VP:		
Sales Sponsor:		
Engineering Manager:		
Engineering Sponsor:		

All information subject to change without notice.
7SA2000 0103 Copyright © 2001 DETROIT DIESEL CORPORATION

DDC/MTU Series 2000 & MTU/DDC Series 4000 Project Form

Customer: Date:

Application Operating Conditions:				
Operating Altitude Maximum:				
Maximum Ambient Temperature:				
Minimum Starting Temperature:				
Gradeability Required:	Continuous:	Intermittent:		
Anticipated Oil Change Interval:				
Low Speed Torque Required:	Low Idle Speed:			
Engine Maximum Overspeed:	Governing Required:			
Application Code:	Duty Cycle:	Description	%Load	%Time
Engine Life Expectation:	Customer Expected Life:			
Current Engine : (if applicable) Manufacturer:	Rating:	Life:		
Special Fuel Requirements:				
Emission Requirements:				
Clutch/ PTO/ or Transmission description:				
Flywheel Housing Size (SAE):				
Engine Options and Accessories Required:				

 Copyright © 2001 DETROIT DIESEL CORPORATION

All information subject to change without notice.
7SA2000 0103 Copyright © 2001 DETROIT DIESEL CORPORATION

APPENDIX B: END PRODUCT QUESTIONNAIRE

Placeholder for Construction and Industrial EPQ and Genset EPQ.

7SA2000 0103 Copyright © 2001 DETROIT DIESEL CORPORATION