MARINE DIESEL ENGINES

6LAH(M)-STE3
456～515kW(620～700hp)

YANMAR

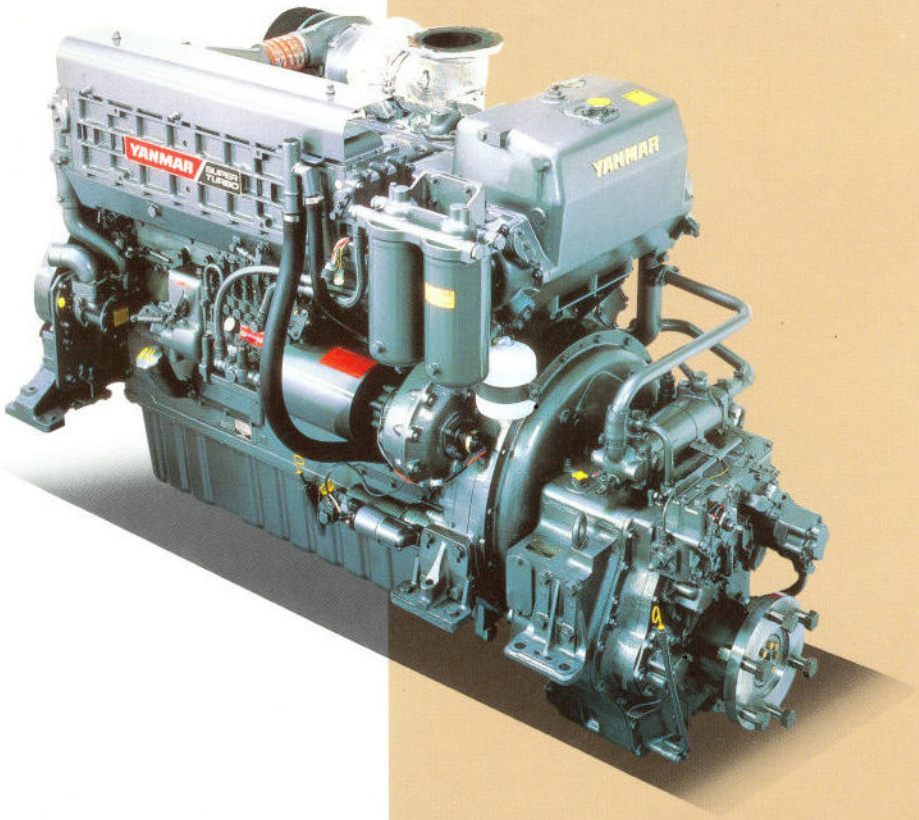

LLOYD'S REGISTER QUALITY COMPANY ISO9001

NATIONAL ACCREDITATION OF CERTIFICATION BODIES

Photograph may show optional equipment.

The 6LAH-STE3 Super-Turbocharges Yo

Fast Company

The Basic Ingredients

Direct injection, 4 valves per cylinder plus intercooling and turbocharging.

The Yanmar Advantage

In-house technology has made possible a very high pressure fuel injection system incorporating exact metering of fuel volume, injection timing, and spray pattern. Add this to our combustion chamber, better use of thermal analysis and water galleries to combat hot spots, and you have the recipe for a very powerful, very efficient diesel engine.

Less Weight

Extensive use of aluminum slashes weight. Minimum overall engine dimensions are helped by the compact YX marine transmission, making for easier installation in tight locations or for mounting lower in the vessel.

Built to Last

Efficient rubber engine mounts and thorough attention to engine balance make for smooth shifting. Fresh water cooling reduces internal corrosion. Cooling galleries stay clean longer. Generous crankshaft dimensions, and a block designed to be light yet rigid — all mean longer engine life.

PERFORMANCE CURVES

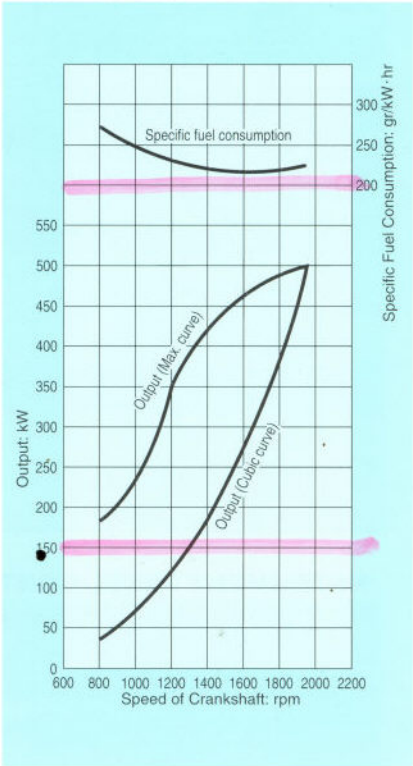

ENGINE SPECIFICATIONS

Model		6LAH-STE3 (with marine gear)	6LAHM-STE3 (without marine gear)
Type		4-cycle, vertical, turbo-charged,diesel engine	
Number of cylinders		6 in-line	
Bore × stroke	mm(in.)	150 × 165 (5.91 × 6.50)	
Displacement	ℓ (cu.in.)	17.494 (1067.7)	
Output kW(hp)/rpm	Rated	456(620)/1900	470(640)/1900
	Max.	500(680)/1950	515(700)/1950
Fuel consumption	gr/kW•hr	224	217
Direction of rotation (crankshaft)		Counterclockwise viewed from stern	
Combustion system		Direct injection	
Cooling system		Fresh water cooling with sea water & fresh water pumps	
Lubricating system		Forced lubrication with gear pump	
Starting system		Electric starting motor (DC 24V)	
Dry weight	kg(lbs)	2600(5732)[with YX-181]	2040(4497)

MARINE GEAR SPECIFICATIONS

Model		YX-181			YX-180L		
Type		Hydraulic multi-disc clutch, wet type					
Reduction ratio (forward)		2.08	2.55	3.03	3.50	4.00	4.54
Propeller shaft speed (at rated)	rpm	914	746	626	543	475	419
Direction of rotation (propeller shaft)		Counterclockwise viewed from stern					
Dry weight	kg(lbs)	560(1235)			680(1499)		

Your Boat Into More Commercial Action

Specific Fuel Consumption: gr/kW·hr

DIMENSIONS

Unit: mm (inch)

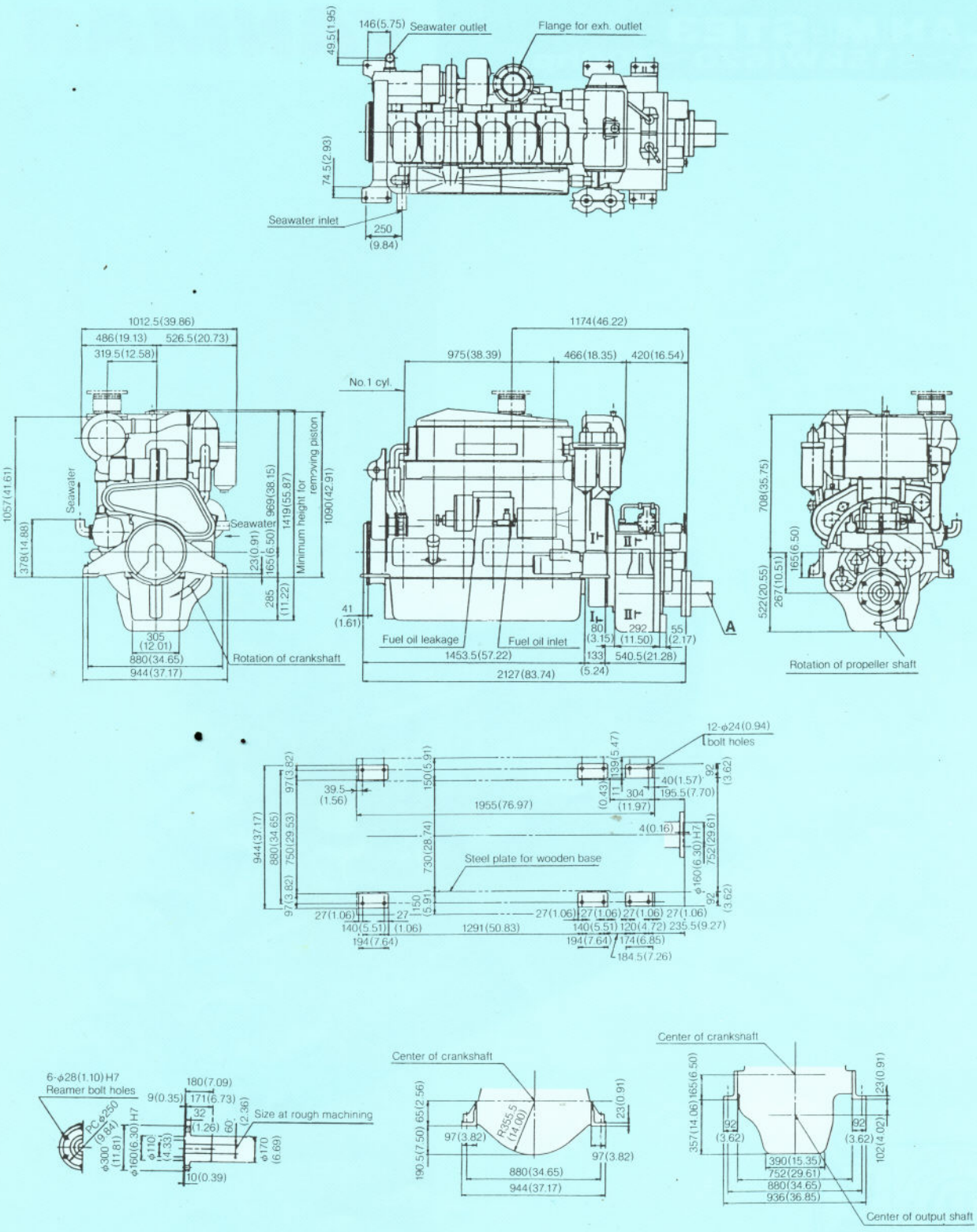

ACCESSORIES

Remarks: ● Standard △ Optional

Item	Name of accessories	Q'ty	6LAH-STE3
Installation	Installation plate	2	△
	Adjusting shim for engine	1 set	△
	Adjusting shim for marine gear	1 set	△
	Installation bolt kit	1 set	△
	Jack bolt	1 set	△
	Chock liner, bolt & nut for steel boat	1 set	△
	B-type V-pully for front P.T.O	1 set	△
Air	Exhaust gas pipe	1	△
	Breather hose with fittings	1 set	●
	Exh. flexible joint (T/C out)	1	●
	Exh. thermometer (T/C inlet)	2	△
	Intake air filter	1	●
	Exh. gas silencer	1	△
	Engine room ventilator	1 set	△
Fuel oil	Drain separator	1	●
	Duplex type fuel filter (mounted on eng.)	1	△
	Fuel sedimentary filter	1	△
	Fuel oil pipe	1	△
Lubrication oil	Evacuation hand pump	1	●
	Duplex type oil filter (mounted on eng.)	1	△
Cooling system	Kingston cock	1	△
	Kingston valve	1	△
	Raw water filter (simplex)	1	△
	Bilge pump (electric type)	1	△
	Fresh water sub-tank	1	●

Item	Name of accessories	Q'ty	6LAH-STE3
Cooling system	Raw water pipe	1	△
Electric device	Battery switch	1	△
	Charging Alternator	1	●
	Starting motor (1-pole type)	1 set	●
	Starting motor w/harness (2-pole type)	1 set	△
	Battery	1 set	△
Remote control	Control head (2-handle type)	1	△
	Control head (1-handle type)	1	△
	Push-pull cable (– 10m)	2	△
	Push-pull cable (12m – 20m)	2	△
	Wireharness (4m × Q'ty)		△
	Instrument panel for wheel house (D-type)	1	●
	Dual type instrument panel (C-type)	1	△
	Connection wireharness for dual panel	1	
	Engine panel (mounted on eng.)	1	△
	Emergency stop push button with solenoid	1	△
	Over speed relay	1	△
Others	Half coupling (rough bore type)	1	●
	Standard spare parts	1	●
	Standard tool kit	1	●
	Operation manual	1	●
	Parts book for engine	1	△
	Service manual	1	△

INSTRUMENT PANEL CONTAINS FOLLOWING ITEMS

Unit: mm (in.)

Detail of instrument panel C-type

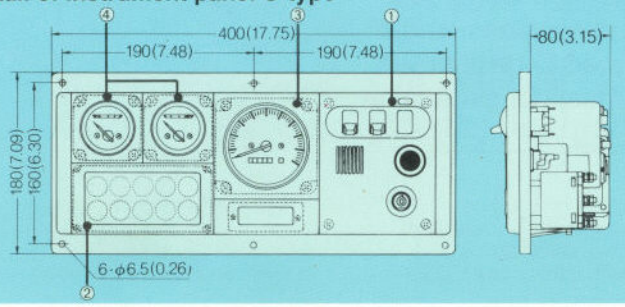

① **Switch unit**
- Key switch
- Alarm buzzer
- Alarm buzzer stop switch
- Illumination switch

② **Alarm lamp unit with Alarm monitor device**
- Battery not charging
- C.W. high temp.
- L.O. low pressure
- Clutch oil pressure
- L.O. filter clogged
- C.W. level

③ **Tachometer unit**
- Tachometer with hour meter

④ **Sub meter unit**
- L.O. pressure meter
- C.W. temp. meter

Detail of instrument panel D-type

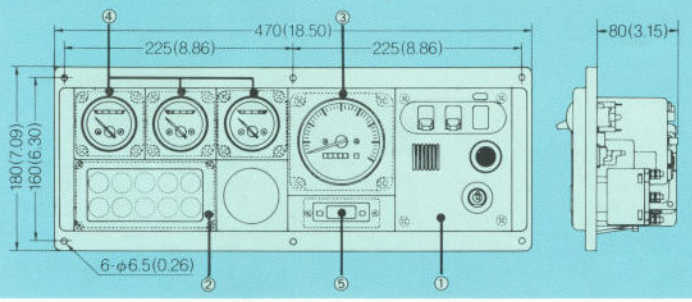

① **Switch unit**
- Key switch
- Alarm buzzer
- Alarm buzzer stop switch
- Illumination switch

② **Alarm lamp unit with Alarm monitor device**
- Battery not charging
- C.W. high temp.
- L.O. low pressure
- Clutch oil pressure
- L.O. filter clogged
- C.W. level

③ **Tachometer unit**
- Tachometer with hour meter

④ **Sub meter unit**
- L.O. pressure meter
- C.W. temp. meter
- Boost meter (Turbo)

⑤ **Clock unit**
- Clock

Note: All data subject to alteratiòn without notice.

YANMAR DIESEL ENGINE CO.,LTD.

OVERSEAS OPERATIONS DIVISION

1-1, 2-chome, Yaesu, Chuo-ku, Tokyo 104, Japan

Telex: 0222-4733 Telephone: 03-3275-4933

Facsimile: 03-3275-4967 Cable: YANMAR TOKYO

Denpar

MAKİNA İTHALAT İHRACAT SANAYİ VE TİCARET LTD. ŞTİ.

60A2017 9507 ① Printed in JAPAN